YASKAWA

YASKAWA AC Drive – J1000

Compact V/f Control Drive

Technical Manual

Type: CIMR-JC ☐

Model: 200 V Class, Single-Phase Input: 0.1 to 2.2 kW
200 V Class, Three-Phase Input: 0.1 to 5.5 kW
400 V Class, Three-Phase Input: 0.2 to 5.5 kW

To properly use the product, read this manual thoroughly and retain for easy reference, inspection, and maintenance. Ensure the end user receives this manual.

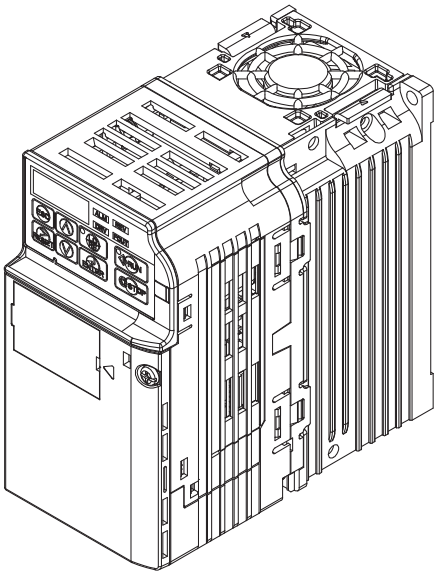

Receiving 1
Mechanical Installation 2
Electrical Installation 3
Start-Up Programming & Operation 4
Parameter Details 5
Troubleshooting 6
Periodic Inspection & Maintenance 7
Peripheral Devices & Options 8
Specifications A
Parameter List B
MEMOBUS/Modbus Communications C
Standards Compliance D

MANUAL NO. SIEP C710606 32A

This Page Intentionally Blank

Copyright © 2008 YASKAWA ELECTRIC CORPORATION. All rights reserved.

All rights reserved. No part of this publication may be reproduced, stored in a retrieval system, or transmitted, in any form or by any means, mechanical, electronic, photocopying, recording, or otherwise, without the prior written permission of Yaskawa. No patent liability is assumed with respect to the use of the information contained herein. Moreover, because Yaskawa is constantly striving to improve its high-quality products, the information contained in this manual is subject to change without notice. Every precaution has been taken in the preparation of this manual. Yaskawa assumes no responsibility for errors or omissions. Neither is any liability assumed for damages resulting from the use of the information contained in this publication.

Table of Contents

i. PREFACE & GENERAL SAFETY 9

i.1 Preface 10

Applicable Documentation 10
Symbols 10
Terms and Abbreviations 10

i.2 General Safety 11

Supplemental Safety Information 11
Safety Messages 11
Drive Label Warnings 13
Warranty Information 13
Quick Reference 13

1. RECEIVING 15

1.1 Section Safety 16

1.2 Model Number and Nameplate Check 17

Nameplate 17

1.3 Component Names 19

IP20/Open-Chassis 19
Front Views 21

2. MECHANICAL INSTALLATION 23

2.1 Section Safety 24

2.2 Mechanical Installation 26

Installation Environment 26
Installation Orientation and Spacing 27
Exterior and Mounting Dimensions 27

3. ELECTRICAL INSTALLATION 29

3.1 Section Safety 30

3.2 Standard Connection Diagram 32

3.3 Main Circuit Connection Diagram 34

Single-Phase 200 V Class (CIMR-J□BA0001 ~ 0010) 34
Three-Phase 200 V Class (CIMR-J□2A0001 ~ 0020);
Three-Phase 400 V Class (CIMR-J□4A0001 ~ 0011) 34

3.4 Terminal Block Configuration 35

3.5 Protective Covers 36

IP20/Open-Chassis Cover Removal and Installation 36

3.6 Main Circuit Wiring 37

Main Circuit Terminal Functions 37

Wire Gauges and Tightening Torque 37
Main Circuit Terminal Power Supply and Motor Wiring 38
3.7 Control Circuit Wiring 40
Control Circuit Terminal Block Functions 40
Terminal Configuration 41
Wiring Procedure 42
3.8 I/O Connections 44
Sinking/Sourcing Mode Switch 44
3.9 Main Frequency Reference 46
DIP Switch S1 Analog Input Signal Selection 46
3.10 Braking Resistor 47
Installation 47
3.11 Interlocking with Connected Machinery 48
Drive Ready Signal 48
3.12 Wiring Checklist 49
4. START-UP PROGRAMMING & OPERATION 51
4.1 Section Safety 52
4.2 Using the Digital LED Operator 54
Keys, Displays, and LEDs 54
Digital Text Display 55
LED Screen Displays 55
LO/RE LED and RUN LED Indications 55
Menu Structure for Digital LED Operator 56
4.3 The Drive and Programming Modes 57
Navigating the Drive and Programming Modes 57
Changing Parameter Settings or Values 59
Verifying Parameter Changes: Verify Menu 59
Switching Between LOCAL and REMOTE 60
Parameters Available in the Setup Group 60
4.4 Start-up Flowchart 62
Flowchart: Basic Start-up 62
4.5 Powering Up the Drive 63
Powering Up the Drive and Operation Status Display 63
V/f Pattern Setting 63
4.6 No-Load Operation Test Run 64
No-Load Operation Test Run 64
4.7 Test Run with Load Connected 65
Test Run with the Load Connected 65
4.8 Verifying and Backing Up Parameter Settings 66
Parameter Access Level: A1-01 66
Password Settings: A1-04, A1-05 66
Copy Function (Optional) 66
4.9 Test Run Checklist 67
5. PARAMETER DETAILS 69
5.1 A: Initialization 70
A1: Initialization 70
5.2 b: Application 72
b1: Mode of Operation 72
b2: DC Injection Braking 76

5.3 C: Tuning ... 77
C1: Acceleration and Deceleration Times ... 77
C2: S-Curve Characteristics ... 77
C3: Slip Compensation ... 78
C4: Torque Compensation ... 78
C6: Carrier Frequency ... 79
5.4 d: Reference Settings ... 82
d1: Frequency Reference ... 82
d2: Frequency Upper/Lower Limits ... 83
d3: Jump Frequency ... 84
d4: Frequency Hold Function ... 84
5.5 E: Motor Parameters ... 86
E1: V/f Characteristics ... 86
E2: Motor 1 Parameters ... 88
5.6 H: Terminal Functions ... 90
H1: Multi-Function Digital Inputs ... 90
H2: Multi-Function Output ... 95
H3: Analog Input Terminal A1 Settings ... 98
H4: Multi-Function Analog Output Terminal AM ... 101
H5: MEMOBUS/Modbus Serial Communication ... 101
5.7 L: Protection Functions ... 102
L1: Motor Protection Functions ... 102
L2: Momentary Power Loss Ride-Thru ... 103
L3: Stall Prevention ... 104
L4: Speed Agree ... 106
L5: Fault Restart ... 107
L6: Torque Detection ... 108
L8: Hardware Protection ... 109
5.8 n: Special Adjustments ... 112
n1: Hunting Prevention ... 112
n3: Overexcitation Deceleration ... 112
5.9 o: Operator Related Settings ... 113
o1: Display Settings and Selections ... 113
o2: Operator Key Selections ... 113
o3: Copy Function ... 114
o4: Maintenance Monitor Settings ... 115
5.10 U: Monitor Parameters ... 117
U1: Operation Status Monitors ... 117
U2: Fault History ... 117
U4: Maintenance Monitors ... 117
6. TROUBLESHOOTING ... 119
6.1 Section Safety ... 120
6.2 Motor Performance Fine Tuning ... 122
Parameters for Tuning the Drive ... 122
Motor Hunting and Oscillation Control Parameters ... 122
6.3 Drive Alarms, Faults, and Errors ... 123
Types of Alarms, Faults, and Errors ... 123
Alarm and Error Displays ... 123
6.4 Fault Detection ... 125
Fault Displays, Causes and Possible Solutions ... 125
6.5 Alarm Detection ... 131

Alarm Codes, Causes, and Possible Solutions 131
6.6 Operator Programming Errors 134
oPE Codes, Causes, and Possible Solutions 134
6.7 Diagnosing and Resetting Faults 135
Fault Occurs Simultaneously with Power Loss 135
If the Drive Still has Power After a Fault Occurs 135
Viewing Fault History Data After Fault 135
Fault Reset Methods 135
6.8 Troubleshooting without Fault Display 136
Cannot Change Parameter Settings 136
Motor Does Not Rotate Properly after Pressing RUN Button or after Entering External Run Command 136
7. PERIODIC INSPECTION & MAINTENANCE 141
7.1 Section Safety 142
7.2 Inspection 144
Recommended Daily Inspection 144
Recommended Periodic Inspection 144
7.3 Periodic Maintenance 146
Replacement Parts 146
7.4 Drive Cooling Fans 147
Cooling Fan Replacement 147
8. PERIPHERAL DEVICES & OPTIONS 149
8.1 Section Safety 150
8.2 Drive Options and Peripheral Devices 152
8.3 Connecting Peripheral Devices 153
8.4 Installing Peripheral Devices 154
Installing a Molded Case Circuit Breaker (MCCB) 154
Installing a Leakage Breaker 154
Installing a Magnetic Contactor 154
Connecting an AC or DC Reactor 155
Connecting a Surge Protector 155
Connecting a Noise Filter 155
Installing Fuses on the Input Side 157
Installing a Motor Thermal Overload (oL) Relay on the Drive Output 157
NEMA Type 1 Kit 158
8.5 Communication Options 161
A. SPECIFICATIONS 163
A.1 Heavy Duty and Normal Duty Ratings 164
A.2 Single/Three-Phase 200 V Class Drive 165
A.3 Three-Phase 400 V Class Drives 166
A.4 Drive Specifications 167
A.5 Drive Watt Loss Data 169
A.6 Drive Derating Data 170
Temperature Derating 170
B. PARAMETER LIST 171
B.1 Parameter Groups 172
B.2 Parameter Table 173
A: Initialization Parameters 173

b: Application 173
C: Tuning 174
d: References 175
E: Motor Parameters 176
H Parameters: Multi-Function Terminals 177
L: Protection Function 179
n: Advanced Performance Set-Up 182
o: Operator Related Parameters 182
U: Monitors 183

B.3 Defaults by Drive Capacity (o2-04) and ND/HD (C6-01) 185

C. MEMOBUS/MODBUS COMMUNICATIONS 187

C.1 Section Safety 188

C.2 MEMOBUS/Modbus Configuration 189

C.3 Communication Specifications 190

C.4 Connecting to a Network 191

Network Cable Connection 191
Wiring Diagram for Multiple Connection 191
Network Termination 192

C.5 MEMOBUS/Modbus Setup Parameters 193

MEMOBUS/Modbus Serial Communication 193

C.6 Drive Operations by MEMOBUS/Modbus 195

Observing the Drive Operation 195
Controlling the Drive 195

C.7 Communications Timing 196

Command Messages from Master to Drive 196
Response Messages from Drive to Master 196

C.8 Message Format 197

Message Content 197
Slave Address 197
Function Code 197
Data 197
Error Check 197

C.9 Message Examples 199

Reading Drive MEMOBUS/Modbus Register Contents 199
Loopback Test 199
Writing to Multiple Registers 200

C.10 MEMOBUS/Modbus Data Table 201

Command Data 201
Monitor Data 202
Broadcast Messages 205
Fault History Contents 205
Alarm Register Contents 206

C.11 Changing Drive Parameters 207

Drive Operations on Parameter Change 207
Issuing an Enter Command 207

C.12 Communication Errors 208

MEMOBUS/Modbus Error Codes 208
Slave Not Responding 208

C.13 Self-Diagnostics 209

D. STANDARDS COMPLIANCE 211

D.1 Section Safety **212**
D.2 European Standards **214**
CE Low Voltage Directive Compliance 214
EMC Guidelines Compliance 214
D.3 UL Standards **219**
UL Standards Compliance 219
Drive Motor Overload Protection 220
D.4 User Setting Table **222**
INDEX **225**

i

Preface & General Safety

This section provides safety messages pertinent to this product that, if not heeded, may result in fatality, personal injury, or equipment damage. Yaskawa is not responsible for the consequences of ignoring these instructions.

I.1 PREFACE.....10

I.2 GENERAL SAFETY.....11

i.1 Preface

Yaskawa manufactures products used as components in a wide variety of industrial systems and equipment. The selection and application of Yaskawa products remain the responsibility of the equipment manufacturer or end user. Yaskawa accepts no responsibility for the way its products are incorporated into the final system design. Under no circumstances should any Yaskawa product be incorporated into any product or design as the exclusive or sole safety control. Without exception, all controls should be designed to detect faults dynamically and fail safely under all circumstances. All systems or equipment designed to incorporate a product manufactured by Yaskawa must be supplied to the end user with appropriate warnings and instructions as to the safe use and operation of that part. Any warnings provided by Yaskawa must be promptly provided to the end user. Yaskawa offers an express warranty only as to the quality of its products in conforming to standards and specifications published in the Yaskawa manual. NO OTHER WARRANTY, EXPRESSED OR IMPLIED, IS OFFERED. Yaskawa assumes no liability for any personal injury, property damage, losses, or claims arising from misapplication of its products.

◆ Applicable Documentation

The following manuals are available for J1000 series drives:

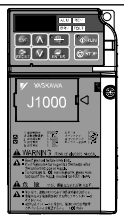	J1000 Series Compact V/f Control Drive Quick Start Guide
	Read this manual first. This guide is packaged together with the product. It contains basic information required to install and wire the drive. This guide provides basic programming and simple setup and adjustment.
	J1000 Series Compact V/f Control Drive Technical Manual
	This manual describes installation, wiring, operation procedures, functions, troubleshooting, maintenance, and inspections to perform before operation.

◆ Symbols

Note: Indicates a supplement or precaution that does not cause drive damage.

TERMS **Indicates a term or definition used in this manual.**

◆ Terms and Abbreviations

- **Drive**: Yaskawa J1000 Series Drive

i.2 General Safety

◆ Supplemental Safety Information

General Precautions
• The diagrams in this manual may be indicated without covers or safety shields to show details. Restore covers or shields before operating the drive and run the drive according to the instructions described in this manual. • Any illustrations, photographs, or examples used in this manual are provided as examples only and may not apply to all products to which this manual is applicable. • The products and specifications described in this manual or the content and presentation of the manual may be changed without notice to improve the product and/or the manual. • When ordering a new copy of the manual due to damage or loss, contact your Yaskawa representative or the nearest Yaskawa sales office and provide the manual number shown on the front cover. • If nameplate becomes worn or damaged, order a replacement from your Yaskawa representative or the nearest Yaskawa sales office.

⚠ WARNING

Read and understand this manual before installing, operating or servicing this drive. The drive must be installed according to this manual and local codes.

The following conventions are used to indicate safety messages in this manual. Failure to heed these messages could result in serious or possibly even fatal injury or damage to the products or to related equipment and systems.

⚠ DANGER

Indicates a hazardous situation, which, if not avoided, will result in death or serious injury.

⚠ WARNING

Indicates a hazardous situation, which, if not avoided, could result in death or serious injury.

WARNING! *will also be indicated by a bold key word embedded in the text followed by an italicized safety message.*

⚠ CAUTION

Indicates a hazardous situation, which, if not avoided, could result in minor or moderate injury.

CAUTION! *will also be indicated by a bold key word embedded in the text followed by an italicized safety message.*

NOTICE

Indicates a property damage message.

NOTICE: *will also be indicated by a bold key word embedded in the text followed by an italicized safety message.*

◆ Safety Messages

⚠ DANGER

Heed the safety messages in this manual.

Failure to comply will result in death or serious injury.

The operating company is responsible for any injuries or equipment damage resulting from failure to heed the warnings in this manual.

Electrical Shock Hazard

Do not connect or disconnect wiring while the power is on.

Failure to comply will result in death or serious injury.

⚠ DANGER

Before servicing, disconnect all power to the equipment. The internal capacitor remains charged even after the power supply is turned off. The charge indicator LED will extinguish when the DC bus voltage is below 50 Vdc. To prevent electric shock, wait at least one minute after all indicators are OFF and measure the DC bus voltage level to confirm safe level.

⚠ WARNING

Sudden Movement Hazard

System may start unexpectedly upon application of power, resulting in death or serious injury.

Clear all personnel from the drive, motor and machine area before applying power. Secure covers, couplings, shaft keys and machine loads before applying power to the drive.

Electrical Shock Hazard

Do not attempt to modify or alter the drive in any way not explained in this manual.

Failure to comply could result in death or serious injury.

Yaskawa is not responsible for any modification of the product made by the user. This product must not be modified.

Do not allow unqualified personnel to use equipment.

Failure to comply could result in death or serious injury.

Maintenance, inspection, and replacement of parts must be performed only by authorized personnel familiar with installation, adjustment and maintenance of AC drives.

Do not remove covers or touch circuit boards while the power is on.

Failure to comply could result in death or serious injury.

Fire Hazard

Do not use an improper voltage source.

Failure to comply could result in death or serious injury by fire.

Verify that the rated voltage of the drive matches the voltage of the incoming power supply before applying power.

Crush Hazard

Do not use this drive in lifting applications without installing external safety circuitry to prevent accidental dropping of the load.

The drive does not possess built-in load drop protection for lifting applications.

Failure to comply could result in death or serious injury from falling loads.

Install electrical and/or mechanical safety circuit mechanisms independent of drive circuitry.

⚠ CAUTION

Crush Hazard

Do not carry the drive by the front cover.

Failure to comply may result in minor or moderate injury from the main body of the drive falling.

NOTICE

Observe proper electrostatic discharge procedures (ESD) when handling the drive and circuit boards.

Failure to comply may result in ESD damage to the drive circuitry.

Never connect or disconnect the motor from the drive while the drive is outputting voltage.

Improper equipment sequencing could result in damage to the drive.

Do not perform a withstand voltage test on any part of the drive.

Failure to comply could result in damage to the sensitive devices within the drive.

Do not operate damaged equipment.

Failure to comply could result in further damage to the equipment.

Do not connect or operate any equipment with visible damage or missing parts.

NOTICE

Install adequate branch circuit short circuit protection per applicable codes.

Failure to comply could result in damage to the drive.

The drive is suitable for circuits capable of delivering not more than 30,000 RMS symmetrical Amperes, 240 Vac maximum (200 V Class) and 480 Vac maximum (400 V Class).

Do not expose the drive to halogen group disinfectants.

Failure to comply may cause damage to the electrical components in the drive.

Do not pack the drive in wooden materials that have been fumigated or sterilized.

Do not sterilize the entire package after the product is packed.

◆ Drive Label Warnings

Always heed the warning information listed in *Figure i.1* in the position shown in *Figure i.2*.

WARNING Risk of electric shock.

- Read manual before installing.
- Wait 1 minute for capacitor discharge after disconnecting power supply.
- To conform to CE requirements, make sure to ground the supply neutral for 400V class.

Figure i.1 Warning Information

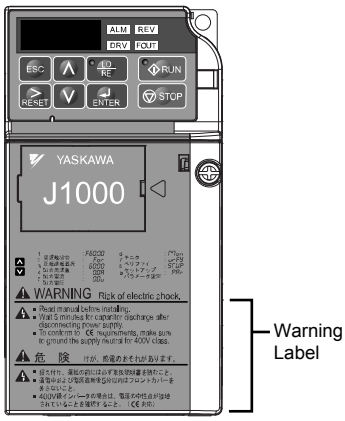

Figure i.2 Warning Information Position

◆ Warranty Information

■ Restrictions

The J1000 was not designed or manufactured for use in devices or systems that may directly affect or threaten human lives or health.

Customers who intend to use the product described in this manual for devices or systems relating to transportation, health care, space aviation, atomic power, electric power, or in underwater applications must first contact their Yaskawa representatives or the nearest Yaskawa sales office.

This product has been manufactured under strict quality-control guidelines. However, if this product is to be installed in any location where failure of this product could involve or result in a life-and-death situation or loss of human life or in a facility where failure may cause a serious accident or physical injury, safety devices must be installed to minimize the likelihood of any accident.

◆ Quick Reference

Run a Motor of One-Frame Larger Capacity
When using this drive for variable torque loads such as fans and pumps, a motor one frame size larger can be used.

Know the Details of Safety Measures
The functions listed below affect the safe operation of the drive. Ensure that the settings fit the application requirements prior to operation.

Know the Details of Safety Measures
Safe operations. Run by power on. Parameter setting b1-17.
LED operator stop key priority selection. Parameter o2-02.
Enter press required after changing the keypad frequency reference. Parameter o2-05.
Operation interlock when program mode is selected. Parameter b1-08.

Standards Compliance	
Refer to European Standards on page 214 and *Refer to UL Standards on page 219*.	CE c UL us LISTED

1

Receiving

This chapter describes the proper inspections to perform after receiving the drive and illustrates the different enclosure types and components.

1.1 SECTION SAFETY.....16
1.2 MODEL NUMBER AND NAMEPLATE CHECK.....17
1.3 COMPONENT NAMES.....19

1.1 Section Safety

⚠ CAUTION

Do not carry the drive by the front cover.

Failure to comply may cause the main body of the drive to fall, resulting in minor or moderate injury.

NOTICE

Observe proper electrostatic discharge procedures (ESD) when handling the drive and circuit boards.

Failure to comply may result in ESD damage to the drive circuitry.

A motor connected to a PWM drive may operate at a higher temperature than a utility-fed motor and the operating speed range may reduce motor cooling capacity.

Ensure that the motor is suitable for drive duty and/or the motor service factor is adequate to accommodate the additional heating with the intended operating conditions.

1.2 Model Number and Nameplate Check

Please perform the following tasks after receiving the drive:

- Inspect the drive for damage.
  If the drive appears damaged upon receipt, contact the shipper immediately.
- Verify receipt of the correct model by checking the information on the nameplate.
- If you have received the wrong model or the drive does not function properly, contact your supplier.

◆ Nameplate

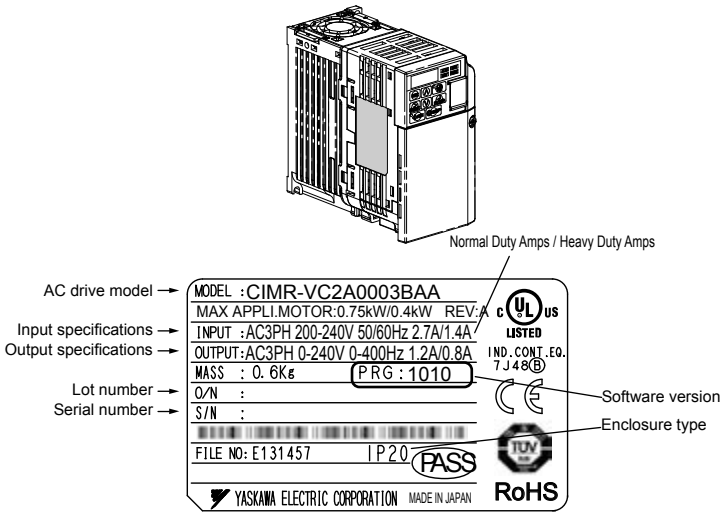

Figure 1.1 Nameplate Information

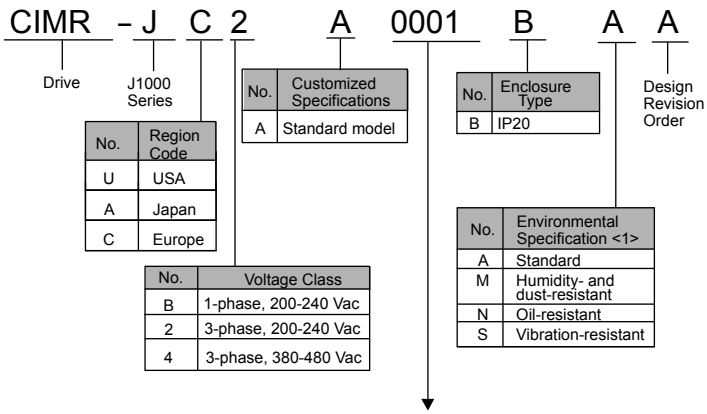

■ Single-Phase 200 V

Normal Duty		
No.	Max. Motor Capacity kW	Rated Output Current A
0001	0.2	1.2
0002	0.4	1.9
0003	0.75	3.3
0006	1.1	6.0
0010	2.2	9.6

Heavy Duty		
No.	Max. Motor Capacity kW	Rated Output Current A
0001	0.1	0.8
0002	0.2	1.6
0003	0.4	3.0
0006	0.75	5.0
0010	1.5	8.0

■ Three-Phase 200 V

Normal Duty		
No.	Max Motor Capacity kW	Rated Output Current A
0001	0.2	1.2
0002	0.4	1.9
0004	0.75	3.5
0006	1.1	6.0
0010	2.2	9.6
0012	3.0	12.0
0020	5.5	19.6

Heavy Duty		
No.	Max Motor Capacity kW	Rated Output Current A
0001	0.1	0.8
0002	0.2	1.6
0004	0.4	3.5
0006	1.1	6.0
0010	1.5	9.6
0012	2.2	12.0
0020	5.5	19.6

■ Three-Phase 400 V

Normal Duty		
No.	Max. Motor Capacity kW	Rated Output Current A
0001	0.4	1.2
0002	0.75	2.1
0004	1.5	4.1
0005	2.2	5.4
0007	3.0	6.9
0009	3.7	8.8
0011	5.5	11.1

Heavy Duty		
No.	Max. Motor Capacity kW	Rated Output Current A
0001	0.2	1.2
0002	0.4	1.8
0004	0.75	3.4
0005	1.5	4.8
0007	2.2	5.5
0009	3.0	7.2
0011	3.7	9.2

<1> Drives with these specifications do not guarantee complete protection for the specified environmental condition.

1.3 Component Names

This section illustrates the drive components as they are mentioned in this manual.

◆ IP20/Open-Chassis

■ Single-Phase AC200 V CIMR-J□BA0001B ~ 0003B Three-Phase AC200 V CIMR-J□2A0001B ~ 0006B

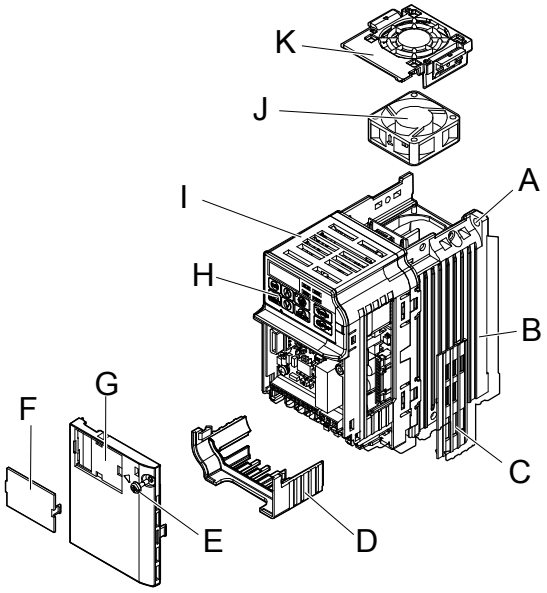

A – Mounting hole
B – Heatsink
C – Cable cover
D – Terminal cover
E – Front cover screw
F – Option connector cover
G – Front cover
H – LED operator *Refer to Using the Digital LED Operator on page 54*
I – Case
J – Cooling fan <1>
K – Fan cover <1>

Figure 1.2 Exploded View of IP20/Open-Chassis Type Components Three-Phase AC200 V CIMR-J□2A0006B

<1> The drives CIMR-J□BA0001B ~ 0003B and CIMR-J□2A0001B ~ 0004B do not have a cooling fan or a cooling fan cover.

■ Single-Phase AC200 V CIMR-J□BA0006B ~ 0010B Three-Phase AC200 V CIMR-J□2A0010B ~ 0020B Three-Phase AC400 V CIMR-J□4A0001B ~ 0011B

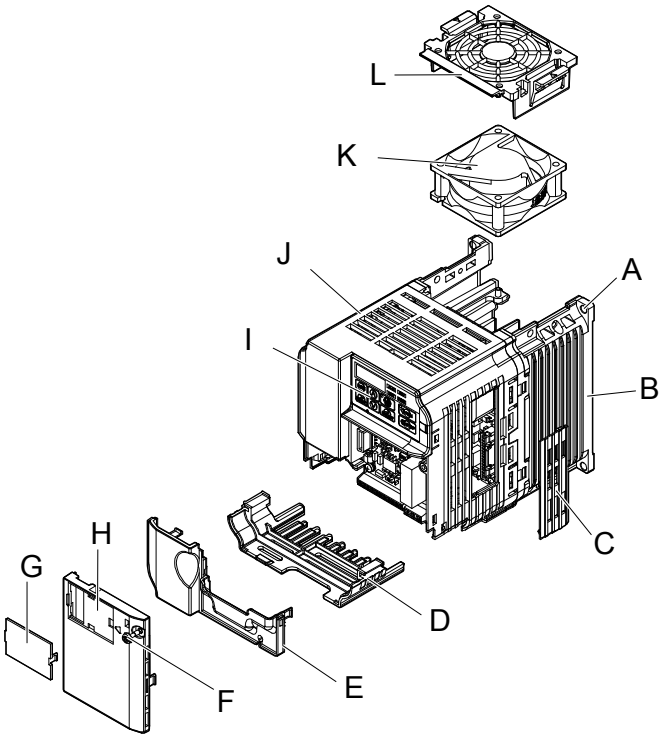

A – Mounting hole
B – Heatsink
C – Cable cover
D – Terminal cover
E – Bottom cover
F – Front cover screw
G – Option connector cover
H – Front cover
I – LED operator *Refer to Using the Digital LED Operator on page 54*
J – Case
K – Cooling fan <1>
L – Fan cover <1>

Figure 1.3 Exploded view of IP20/Open-Chassis Type Components Three-Phase AC200 V CIMR-J□2A0012B

<1> The drives CIMR-J□BA0006B and CIMR-J□4A0001B ~ 0004B do not have a cooling fan or a cooling fan cover.

◆ Front Views

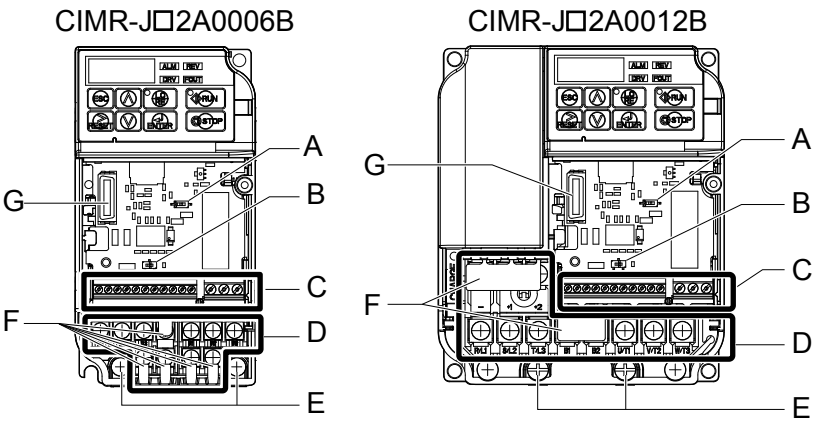

A – DIP switch S1 *Refer to DIP Switch S1 Analog Input Signal Selection on page 46*
B – DIP switch S3 *Refer to Sinking/Sourcing Mode Switch on page 44*
C – Control circuit terminal *Refer to Control Circuit Wiring on page 40*
D – Main circuit terminal *Refer to Wiring the Main Circuit Terminal on page 39*
E – Ground terminal
F – Terminal cover
G – Option unit connector *Refer to Communication Options on page 161*

Figure 1.4 Front Views of Drives

This Page Intentionally Blank

2

Mechanical Installation

This chapter explains how to properly mount and install the drive.

2.1 SECTION SAFETY.....24
2.2 MECHANICAL INSTALLATION.....26

2.1 Section Safety

⚠ WARNING

Fire Hazard

Provide sufficient cooling when installing the drive inside an enclosed panel or cabinet.

Failure to comply could result in overheating and fire.

When multiple drives are placed inside the same enclosure panel, install proper cooling to ensure air entering the enclosure does not exceed 40 °C.

⚠ CAUTION

Crush Hazard

Do not carry the drive by the front cover.

Failure to comply may result in minor or moderate injury from the main body of the drive falling.

NOTICE

Observe proper electrostatic discharge (ESD) procedures when handling the drive.

Failure to comply could result in ESD damage to the drive circuitry.

It may be difficult to perform maintenance on the cooling fans of drives installed in a vertical row inside an enclosure.

Ensure adequate spacing at the top of the drive to perform cooling fan replacement when required.

Operating the motor in the low-speed range diminishes the cooling effects, increases motor temperature, and may lead to motor damage by overheating.

Reduce the motor torque in the low-speed range whenever using a standard blower cooled motor. If 100% torque is required continuously at low speed, consider using a special drive or vector motor. Select a motor that is compatible with the required load torque and operating speed range.

Do not operate motors above the maximum rated RPM.

Failure to comply may lead to bearing or other mechanical motor failures.

The speed range for continuous operation differs according to the lubrication method and motor manufacturer.

If the motor is to be operated at a speed higher than the rated speed, consult with the manufacturer.

Continuously operating an oil-lubricated motor in the low-speed range may result in burning.

NOTICE

When the input voltage is 440 V or higher or the wiring distance is greater than 100 meters, pay special attention to the motor insulation voltage or use a drive-rated motor.

Failure to comply could lead to motor winding failure.

Motor vibration may increase when operating a machine in variable-speed mode, if that machine previously operated at a constant speed.

Install vibration-proof rubber on the motor base or use the frequency jump function to skip a frequency resonating the machine.

The motor may require more acceleration torque with drive operation than with a commercial power supply.

Set a proper V/f pattern by checking the load torque characteristics of the machine to be used with the motor.

The rated input current of submersible motors is higher than the rated input current of standard motors.

Select an appropriate drive according to its rated output current. When the distance between the motor and drive is long, use a cable thick enough to connect the motor to the drive to prevent motor torque reduction.

When using an explosion-proof motor, it must be subject to an explosion-proof test in conjunction with the drive.

This is also applicable when an existing explosion-proof motor is to be operated with the drive. Since the drive itself is not explosion-proof, always install it in a safe place.

Do not use a drive for a single-phase motor.

Replace the motor with a three-phase motor.

If an oil-lubricated gearbox or speed reducer is used in the power transmission mechanism, oil lubrication will be affected when the motor operates only in the low speed range.

The power transmission mechanism will make noise and experience problems with service life and durability if the motor is operated at a speed higher than the rated speed.

2.2 Mechanical Installation

This section outlines specifications, procedures, and environment for proper mechanical installation of the drive.

◆ Installation Environment

To help prolong the optimum performance life of the drive, install the drive in the proper environment. The table below provides a description of the appropriate environment for the drive.

Table 2.1 Installation Environment

Environment	Conditions
Installation Area	Indoors
Ambient Temperature	-10 °C to +50 °C (IP20/Open-Chassis) Drive reliability improves in environments without wide temperature fluctuations. When using an enclosure panel, install a cooling fan or air conditioner in the area to ensure that the air temperature inside the enclosure does not exceed the specified levels. Do not allow ice to develop on the drive.
Humidity	95% RH or less and free of condensation
Storage Temperature	-20 °C to +60 °C
Surrounding Area	Install the drive in an area free from: • oil mist and dust • metal shavings, oil, water or other foreign materials • radioactive materials • combustible materials (e.g., wood) • harmful gases and liquids • excessive vibration • chlorides • direct sunlight
Altitude	1000 m or lower
Vibration	10 to 20 Hz at 9.8 m/s^2 20 to 55 Hz at 5.9 m/s^2
Orientation	Install the drive vertically to maintain maximum cooling effects.

NOTICE: *Prevent foreign matter such as metal shavings or wire clippings from falling into the drive during installation and project construction. Failure to comply could result in damage to the drive. Place a temporary cover over the top of the drive during installation. Remove the temporary cover before startup, as the cover will reduce ventilation and cause the drive to overheat.*

◆ Installation Orientation and Spacing

Install the drive upright as illustrated in *Figure 2.1* to maintain proper cooling.

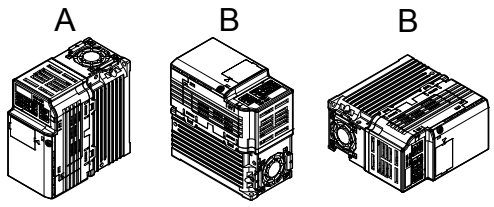

A – Correct **B – Incorrect**

Figure 2.1 Correct Installation Orientation

■ Single Drive Installation

Figure 2.2 explains the required installation spacing to maintain sufficient space for airflow and wiring. Install the heatsink against a closed surface to avoid diverting cooling air around the heatsink.

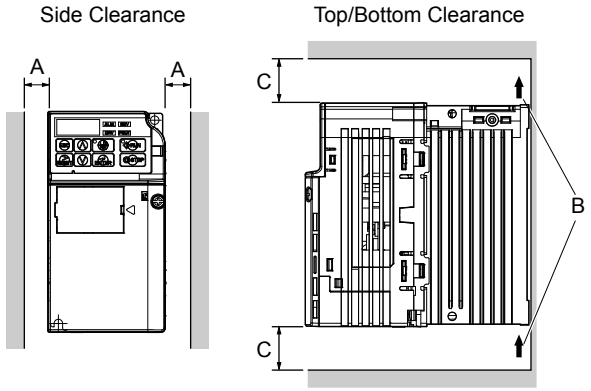

A – 30 mm minimum
B – Airflow direction
C – 100 mm minimum

Figure 2.2 Correct Installation Spacing

■ Multiple Drive Installation

When installing multiple drives into the same enclosure panel, mount the drives according to *Figure 2.2*. When mounting drives with a minimum side-by-side clearance of 2 mm according to *Figure 2.3*, derating must be considered and parameter L8-35 must be set. *Refer to Parameter List on page 171*.

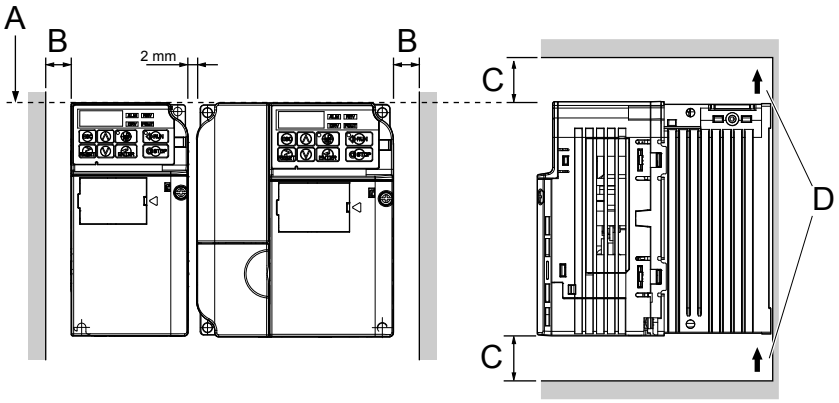

A – Line up the tops of the drives.
B – 30 mm minimum
C – 100 mm minimum
D – Airflow direction

Figure 2.3 Space Between Drives (Side-by-Side Mounting)

Note: When installing drives of different heights in the same enclosure panel, the tops of the drives should line up. Leave space between the top and bottom of stacked drives for cooling fan replacement if required. Using this method, it is possible to replace the cooling fans later.

◆ Exterior and Mounting Dimensions

Refer to NEMA Type 1 Kit on page 158 for exterior and mounting dimensions for NEMA Type 1.

■ IP20/Open-Chassis Drives

Table 2.2 IP20/Open-Chassis (without an EMC filter)

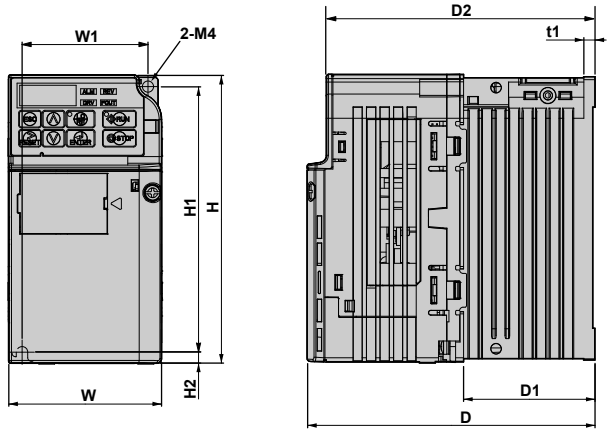

Voltage Class	Drive Model CIMR-J□	Dimensions (mm)									
		W	H	D	W1	H1	H2	D1	D2	t1	Weight (kg)
Single-Phase 200 V Class	BA0001B	68	128	76	56	118	5	6.5	67.5	3	0.6
	BA0002B	68	128	76	56	118	5	6.5	67.5	3	0.6
	BA0003B	68	128	118	56	118	5	38.5	109.5	5	1.0
Three-Phase 200 V Class	2A0001B	68	128	76	56	118	5	6.5	67.5	3	0.6
	2A0002B	68	128	76	56	118	5	6.5	67.5	3	0.6
	2A0004B	68	128	108	56	118	5	38.5	99.5	5	0.9
	2A0006B	68	128	128	56	118	5	58.5	119.5	5	1.1

Table 2.3 IP20/Open-Chassis (without an EMC filter)

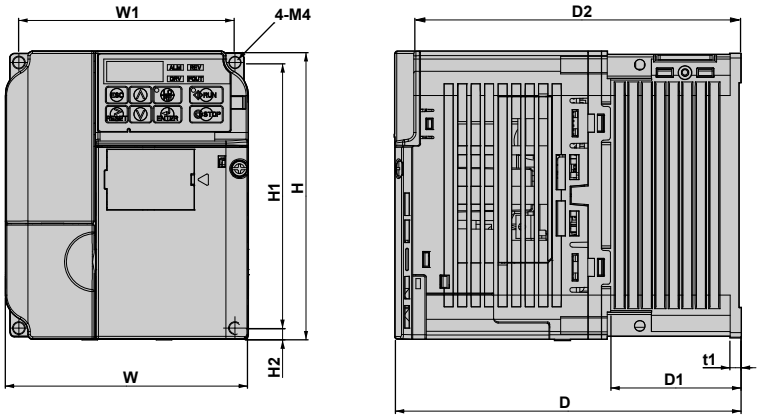

Voltage Class	Drive Model CIMR-J□	Dimensions (mm)									
		W	H	D	W1	H1	H2	D1	D2	t1	Weight (kg)
Single-Phase 200 V Class	BA0006B	108	128	137.5	96	118	5	58	129	5	1.7
	BA0010B	108	128	154	96	118	5	58	145.5	5	1.8
Three-Phase 200 V Class	2A0010B	108	128	129	96	118	5	58	120.5	5	1.7
	2A0012B	108	128	137.5	96	118	5	58	129	5	1.7
	2A0020B	140	128	143	128	118	5	65	134.5	5	2.4
Three-Phase 400 V Class	4A0001B	108	128	81	96	118	5	10	72.5	5	1.0
	4A0002B	108	128	99	96	118	5	28	90.5	5	1.2
	4A0004B	108	128	137.5	96	118	5	58	129	5	1.7
	4A0005B	108	128	154	96	118	5	58	145.5	5	1.7
	4A0007B	108	128	154	96	118	5	58	145.5	5	1.7
	4A0009B	108	128	154	96	118	5	58	145.5	5	1.7
	4A0011B	140	128	143	128	118	5	65	134.5	5	2.4

3

Electrical Installation

This chapter explains proper procedures for wiring the control circuit terminals, motor and power supply.

3.1 SECTION SAFETY....30
3.2 STANDARD CONNECTION DIAGRAM....32
3.3 MAIN CIRCUIT CONNECTION DIAGRAM....34
3.4 TERMINAL BLOCK CONFIGURATION....35
3.5 PROTECTIVE COVERS....36
3.6 MAIN CIRCUIT WIRING....37
3.7 CONTROL CIRCUIT WIRING....40
3.8 I/O CONNECTIONS....44
3.9 MAIN FREQUENCY REFERENCE....46
3.10 BRAKING RESISTOR....47
3.11 INTERLOCKING WITH CONNECTED MACHINERY....48
3.12 WIRING CHECKLIST....49

3.1 Section Safety

⚠ DANGER

Electrical Shock Hazard

Do not connect or disconnect wiring while the power is on.

Failure to comply will result in death or serious injury.

⚠ WARNING

Electrical Shock Hazard

Do not operate equipment with covers removed.

Failure to comply could result in death or serious injury.

The diagrams in this section may show drives without covers or safety shields to show details. Be sure to reinstall covers or shields before operating the drives and run the drives according to the instructions described in this manual.

Always ground the motor-side grounding terminal.

Improper equipment grounding could result in death or serious injury by contacting the motor case.

Do not perform work on the drive while wearing loose clothing, jewelry or without eye protection.

Failure to comply could result in death or serious injury.

Remove all metal objects such as watches and rings, secure loose clothing, and wear eye protection before beginning work on the drive.

Do not remove covers or touch circuit boards while the power is on.

Failure to comply could result in death or serious injury.

Do not allow unqualified personnel to perform work on the drive.

Failure to comply could result in death or serious injury.

Installation, maintenance, inspection, and servicing must be performed only by authorized personnel familiar with installation, adjustment, and maintenance of AC drives.

Do not touch any terminals before the capacitors have fully discharged.

Failure to comply could result in death or serious injury.

Before wiring terminals, disconnect all power to the equipment. The internal capacitor remains charged even after the power supply is turned off. The charge indicator LED will extinguish when the DC bus voltage is below 50 Vdc. To prevent electric shock, wait at least one minute after all indicators are off and measure the DC bus voltage level to confirm safe level.

Fire Hazard

Tighten all terminal screws to the specified tightening torque.

Loose electrical connections could result in death or serious injury by fire due to overheating of electrical connections.

Do not use improper combustible materials.

Failure to comply could result in death or serious injury by fire.

Attach the drive to metal or other noncombustible material.

Do not use an improper voltage source.

Failure to comply could result in death or serious injury by fire.

Verify that the rated voltage of the drive matches the voltage of the incoming power supply before applying power.

NOTICE

Observe proper electrostatic discharge procedures (ESD) when handling the drive and circuit boards.

Failure to comply may result in ESD damage to the drive circuitry.

Never connect or disconnect the motor from the drive while the drive is outputting voltage.

Improper equipment sequencing could result in damage to the drive.

Do not use unshielded cable for control wiring.

Failure to comply may cause electrical interference resulting in poor system performance. Use shielded, twisted-pair wires and ground the shield to the ground terminal of the drive.

Check all the wiring to ensure that all connections are correct after installing the drive and connecting any other devices.

Failure to comply could result in damage to the drive.

Do not modify the drive circuitry.

Failure to comply could result in damage to the drive and will void warranty.

Yaskawa is not responsible for any modification of the product made by the user. This product must not be modified.

3.2 Standard Connection Diagram

Connect the drive and peripheral devices as shown in ***Figure 3.1***. It is possible to run the drive via the digital operator without connecting digital I/O wiring. This section does not discuss drive operation; ***Refer to Start-Up Programming & Operation on page 51*** for instructions on operating the drive.

NOTICE: *Inadequate branch short circuit protection could result in damage to the drive. Install adequate branch circuit short circuit protection per applicable codes. The drive is suitable for circuits capable of delivering not more than 30,000 RMS symmetrical amperes, 240 Vac maximum (200 V Class) and 480 Vac maximum (400 V Class).*

NOTICE: *When the input voltage is 440 V or higher or the wiring distance is greater than 100 meters, pay special attention to the motor insulation voltage or use a drive duty motor. Failure to comply could lead to motor insulation breakdown.*

NOTICE: *Do not connect AC control circuit ground to drive enclosure. Improper drive grounding can cause control circuit malfunction.*

NOTICE: *The minimum load for the multi-function relay output MA-MB-MC is 10 mA.*

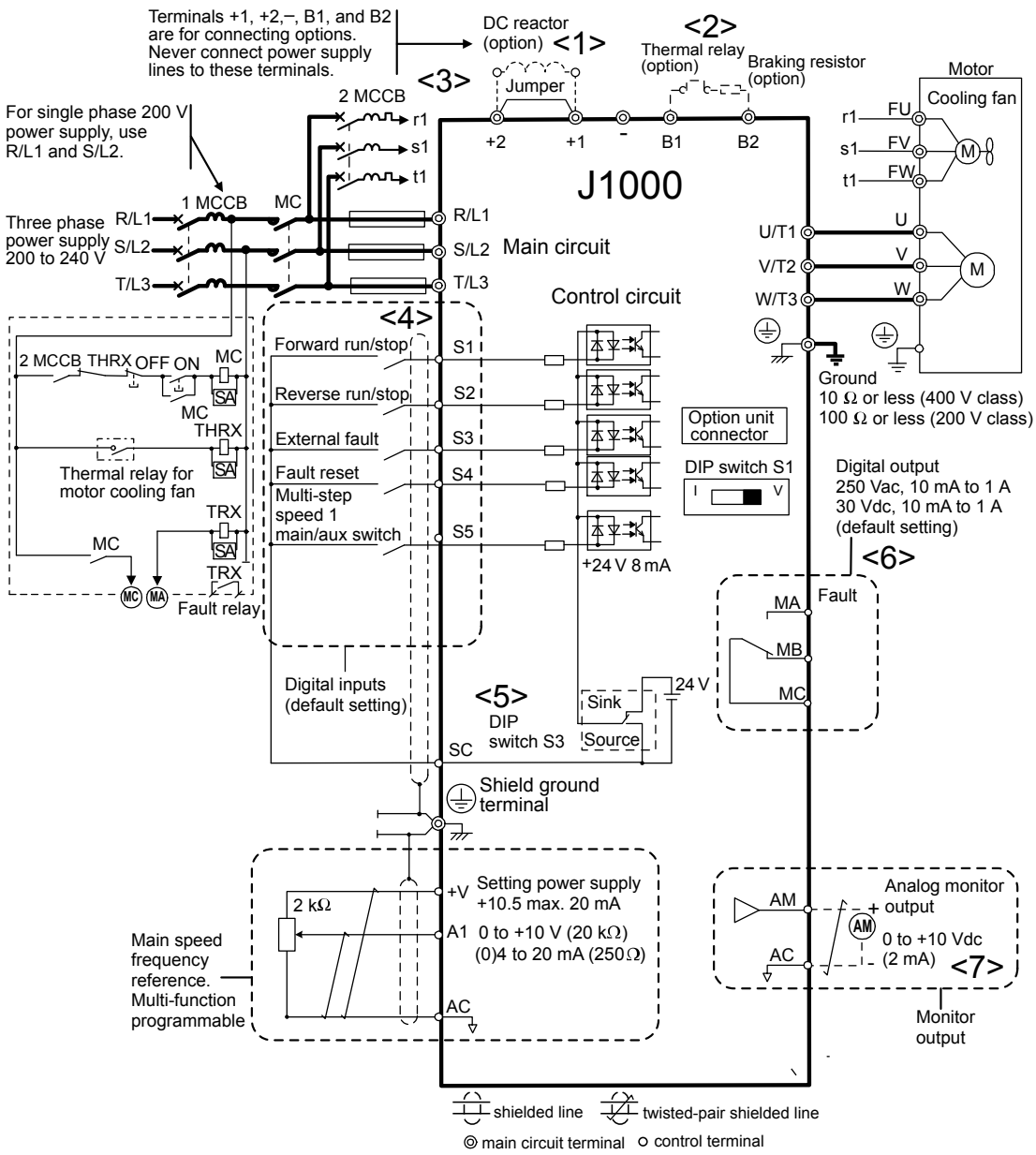

Figure 3.1 Drive Standard Connection Diagram (200 V Class Example)

<1> Remove the jumper when installing an optional DC reactor.
<2> The MC on the input side of the main circuit should open when the thermal relay is triggered.
<3> Self-cooled motors do not require separate cooling fan motor wiring.
<4> Connected using sequence input signal (S1 to S5) from NPN transistor; Default: sink mode (0 V com).
<5> Use only a +24 V internal power supply in sinking mode; the source mode requires an external power supply ***Refer to I/O Connections on page 44***.
<6> Minimum load: 5 Vdc, 10 mA (reference value).

<7> Monitor outputs work with devices such as analog frequency meters, ammeters, voltmeters and wattmeters; they are not intended for use as a feedback-type of signal.

WARNING! *Sudden Movement Hazard. Do not close the wiring for the control circuit unless the multifunction input terminal parameter is properly set (S5 for 3-Wire; H1-05 = "0"). Improper sequencing of run/stop circuitry could result in death or serious injury from moving equipment.*

WARNING! *Sudden Movement Hazard. Ensure start/stop and safety circuits are wired properly and in the correct state before energizing the drive. Failure to comply could result in death or serious injury from moving equipment. When programmed for 3-Wire control, a momentary closure on terminal S1 may cause the drive to start.*

WARNING! *When 3-Wire sequence is used, set the drive to 3-Wire sequence before wiring the control terminals and ensure parameter b1-17 is set to 0 (drive does not accept a run command at power up (default). If the drive is wired for 3-Wire sequence but set up for 2-Wire sequence (default) and if parameter b1-17 is set to 1 (drive accepts a Run command at power up), the motor will rotate in reverse direction at power up of the drive and may cause injury.*

Figure 3.2 illustrates an example of a 3-Wire sequence.

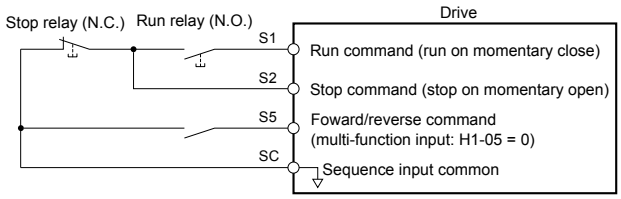

Figure 3.2 3-Wire Sequence

3.3 Main Circuit Connection Diagram

Refer to diagrams in this section for the Main Circuit wiring connections. Connections may vary based on drive capacity. The main circuit DC power supply powers the control circuit.

NOTICE: *Do not use the negative DC bus terminal "-" as a ground terminal. This terminal is at high voltage DC potential. Improper wiring connections could result in damage to the drive.*

◆ Single-Phase 200 V Class (CIMR-J□BA0001 ~ 0010)

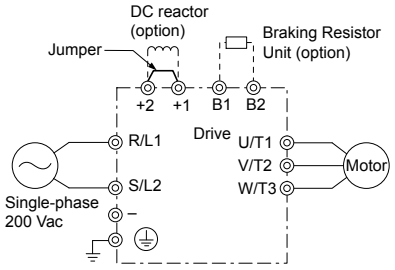

Figure 3.3 Connecting Single-Phase Main Circuit Terminals

NOTICE: *Do not connect T/L3 terminal when using single-phase power supply input. Incorrect wiring may damage the drive.*

◆ Three-Phase 200 V Class (CIMR-J□2A0001 ~ 0020); Three-Phase 400 V Class (CIMR-J□4A0001 ~ 0011)

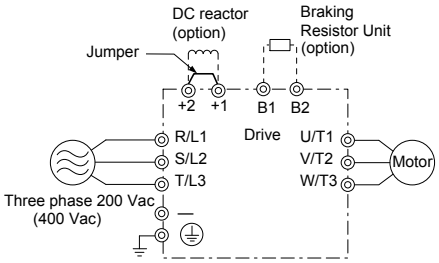

Figure 3.4 Connecting Three-Phase Main Circuit Terminals

3.4 Terminal Block Configuration

The figures in this section provide illustrations of the main circuit terminal block configurations of the different drive sizes.

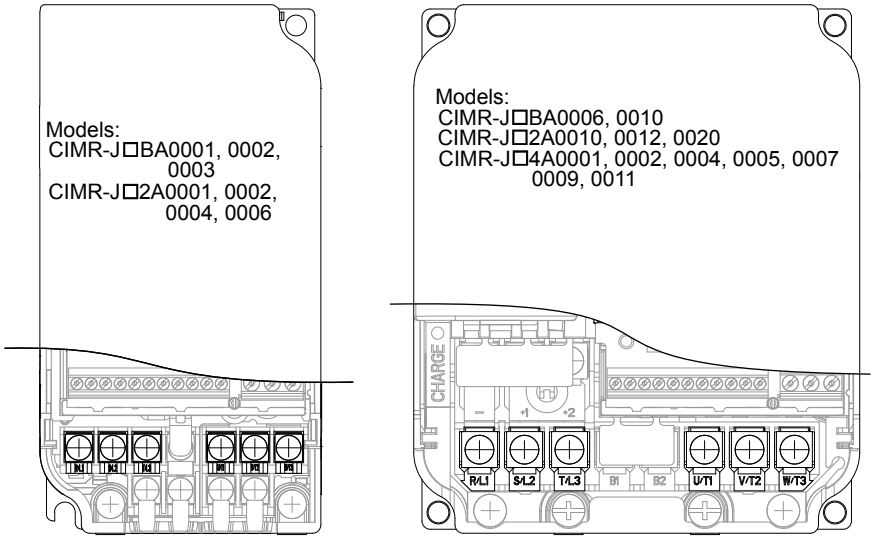

Figure 3.5 Main Circuit Terminal Block Configurations

3.5 Protective Covers

Follow the procedure below to remove the protective covers before wiring the drive and to reattach the covers after wiring is complete.

◆ IP20/Open-Chassis Cover Removal and Installation

■ Removing the Protective Covers

1. Loosen the screw that locks the front cover in place to remove.

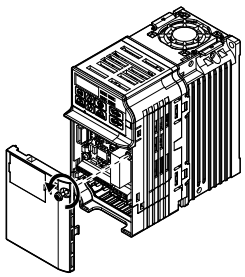

Figure 3.6 Remove the Front Cover on an IP20/Open-Chassis Drive

2. Apply pressure to the tabs on each side of the terminal cover. Pull the terminal cover away from the drive while pushing in on the tabs to pull the cover free.

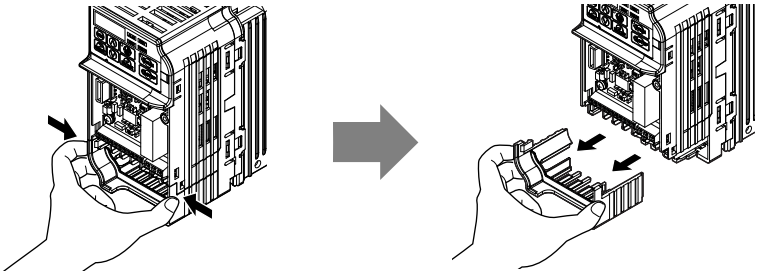

Figure 3.7 Remove the Terminal Cover on an IP20/Open-Chassis Drive

■ Reattaching the Protective Covers

Properly connect all wiring and route power wiring away from control signal wiring. Reattach all protective covers when wiring is complete. Apply only a small amount of pressure to lock the cover back into place.

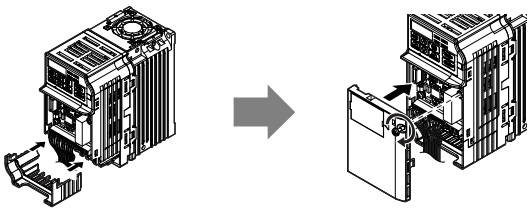

Figure 3.8 Reattach the Protective Covers on an IP20/Open-Chassis Drive

3.6 Main Circuit Wiring

This section describes the functions, specifications, and procedures required to safely and properly wire the main circuit of the drive.

NOTICE: *Do not solder the ends of wire connections to the drive. Soldered wiring connections can loosen over time. Improper wiring practices could result in drive malfunction due to loose terminal connections.*

◆ Main Circuit Terminal Functions

Table 3.1 Main Circuit Terminal Functions

Terminal	Type	Function	Reference
R/L1 S/L2 T/L3	Main circuit power supply input	Connects line power to the drive. Drives with single-phase 200 V input power use terminals R/L1 and S/L2 only (T/L3 must not be used).	*34*
U/T1 V/T2 W/T3	Drive output	Connects to the motor.	*38*
B1 B2	Braking resistor	Available for connecting a braking resistor or the braking resistor unit option.	*47*
+1 +2	DC reactor connection	These terminals are shorted at shipment. Remove the shorting bar between +1 and +2 when connecting a DC reactor to this terminal.	*155*
+1 –	DC power supply input	For connecting a DC power supply.	–
⏚ (2 terminals)	Ground	Grounding Terminal For 200 V class: 100 Ω or less For 400 V class: 10 Ω or less	*38*

◆ Wire Gauges and Tightening Torque

Select the appropriate wires and crimp terminals from *Table 3.2* through *Table 3.4*.

Note: **1.** Wire gauge recommendations based on drive continuous current ratings using 75 °C 600 Vac vinyl-sheathed wire assuming ambient temperature within 30 °C and wiring distance less than 100 m.
2. Terminals +1, +2, –, B1 and B2 are for connecting optional devices such as a DC reactor or braking resistor. Do not connect other non-specified devices to these terminals.

- Consider the amount of voltage drop when selecting wire gauges. Increase the wire gauge when the voltage drop is greater than 2% of motor rated voltage. Ensure the wire gauge is suitable for the terminal block. Use the following formula to calculate the amount of voltage drop:
- Line drop voltage (V) = $\sqrt{3}$ x wire resistance (Ω/km) x wire length (m) x current (A) x 10^{-3}
- Refer to instruction manual TOBPC72060000 for braking unit or braking resistor unit wire gauges.
- *Refer to UL Standards Compliance on page 219* for information on UL compliance.

■ Single-Phase 200 V Class

Table 3.2 Wire Gauge and Torque Specifications

Model CIMR-J□BA	Terminal	Screw Size	Tightening Torque N•m (lb.in.)	Applicable Gauge mm² (AWG)	Recommended Gauge mm² (AWG)
0001 0002 0003	R/L1, S/L2, U/T1, V/T2, W/T3, –, +1, +2, B1, B2, ⏚	M3.5	0.8 to 1.0 (7.1 to 8.9)	0.75 to 2.5 (18 to 14)	2.5 (14)
0006	R/L1, S/L2, U/T1, V/T2, W/T3, –, +1, +2, B1, B2, ⏚	M4	1.2 to 1.5 (10.6 to 13.3)	2.5 to 6 (14 to 10)	2.5 (14)
0010	R/L1, S/L2, U/T1, V/T2, W/T3, ⏚	M4	1.2 to 1.5 (10.6 to 13.3)	2.5 to 6.0 (14 to 10)	4 (12)
	–, +1, +2, B1, B2	M4	1.2 to 1.5 (10.6 to 13.3)	2.5 to 6.0 (14 to 10)	6 (10)

■ Three-Phase 200 V Class

Table 3.3 Wire Gauge and Torque Specifications

Model CIMR-J□2A	Terminal	Screw Size	Tightening Torque N•m (lb.in.)	Applicable Gauge mm² (AWG)	Recommended Gauge mm² (AWG)
0001 0002 0004 0006	R/L1, S/L2, T/L3, U/T1, V/T2, W/T3, –, +1, +2, B1, B2, ⏚	M3.5	0.8 to 1.0 (7.1 to 8.9)	0.75 to 2.5 (18 to 14)	2.5 (14)

Model CIMR-J□2A	Terminal	Screw Size	Tightening Torque N•m (lb.in.)	Applicable Gauge mm² (AWG)	Recommended Gauge mm² (AWG)
0010	R/L1, S/L2, T/L3, U/T1, V/T2, W/T3, –, +1, +2, B1, B2	M4	1.2 to 1.5 (10.6 to 13.3)	2.5 to 6 (14 to 10)	2.5 (14)
	⏚	M4	1.2 to 1.5 (10.6 to 13.3)	2.5 to 6 (14 to 10)	4 (12)
0012	R/L1, S/L2, T/L3, U/T1, V/T2, W/T3, –, +1, +2, B1, B2, ⏚	M4	1.2 to 1.5 (10.6 to 13.3)	2.5 to 6 (14 to 10)	4 (12)
0020	R/L1, S/L2, T/L3, U/T1, V/T2, W/T3, –, +1, +2, B1, B2, ⏚	M4	1.2 to 1.5 (10.6 to 13.3)	2.5 to 6 (14 to 10)	6 (10)

■ Three-Phase 400 V Class

Table 3.4 Wire Gauge and Torque Specifications

Model CIMR-J□4A	Terminal	Screw Size	Tightening Torque N•m (lb.in.)	Applicable Gauge mm² (AWG)	Recommended Gauge mm² (AWG)
0001 0002 0004 0005 0007	R/L1, S/L2, T/L3, U/T1, V/T2, W/T3, –, +1, +2, B1, B2, ⏚	M4	1.2 to 1.5 (10.6 to 13.3)	2.5 to 6.0 (14 to 10)	2.5 (14)
0009	R/L1, S/L2, T/L3, U/T1, V/T2, W/T3, –, +1, +2, B1, B2	M4	1.2 to 1.5 (10.6 to 13.3)	2.5 to 6 (14 to 10)	2.5 (14)
	⏚	M4	1.2 to 1.5 (10.6 to 13.3)	2.5 to 6 (14 to 10)	4 (12)
0011	R/L1, S/L2, T/L3, U/T1, V/T2, W/T3, –, +1, +2, B1, B2	M4	1.2 to 1.5 (10.6 to 13.3)	2.5 to 6 (14 to 10)	2.5 (14)
	⏚	M4	1.2 to 1.5 (10.6 to 13.3)	2.5 to 6 (14 to 10)	4 (12)

◆ Main Circuit Terminal Power Supply and Motor Wiring

This section outlines the various steps, precautions, and checkpoints for wiring the main circuit terminals and motor terminals.

NOTICE: *When connecting the motor to the drive output terminals U/T1, V/T2, and W/T3, the phase order for the drive and motor should match. Failure to comply with proper wiring practices may cause the motor to run in reverse if the phase order is backward.*

NOTICE: *Do not connect phase-advancing capacitors or LC/RC noise filters to the output circuits. Improper application of noise filters could result in damage to the drive.*

NOTICE: *Do not connect the AC power line to the output motor terminals of the drive. Failure to comply could result in death or serious injury by fire as a result of drive damage from line voltage application to output terminals.*

■ Cable Length Between Drive and Motor

When the cable length between the drive and the motor is too long (especially at low frequency output), note that the cable voltage drop may cause reduced motor torque. Drive output current will increase as the leakage current from the cable increases. An increase in leakage current may trigger an overcurrent situation and weaken the accuracy of the current detection.

Adjust the drive carrier frequency according to the following table. If the motor wiring distance exceeds 100 m because of the system configuration, reduce the ground currents.

Refer to ***Table 3.5*** to set the carrier frequency to an appropriate level.

Table 3.5 Cable Length Between Drive and Motor

Cable Length	50 m or less	100 m or less	Greater than 100 m
Carrier Frequency	15 kHz or less	5 kHz or less	2 kHz or less

Note: When setting carrier frequency, calculate the cable length as the total distance of wiring to all connected motors when running multiple motors from a single drive.

■ Ground Wiring

Follow the precautions to wire the ground for one drive or a series of drives.

WARNING! *Electrical Shock Hazard. Always use a ground wire that complies with technical standards on electrical equipment and minimize the length of the ground wire. Improper equipment grounding may cause dangerous electrical potentials on equipment chassis, which could result in death or serious injury.*

WARNING! *Electrical Shock Hazard. Be sure to ground the drive ground terminal. (200 V Class: Ground to 100 Ω or less, 400 V Class: Ground to 10 Ω or less). Improper equipment grounding could result in death or serious injury by contacting ungrounded electrical equipment.*

NOTICE: *Do not share the ground wire with other devices such as welding machines or large-current electrical equipment. Improper equipment grounding could result in drive or equipment malfunction due to electrical interference.*

NOTICE: *When using more than one drive, ground multiple drives according to instructions. Improper equipment grounding could result in abnormal operation of drive or equipment.*

Refer to ***Figure 3.9*** when using multiple drives. Do not loop the ground wire.

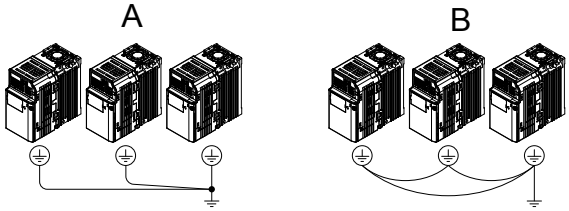

A – Correct **B – Incorrect**

Figure 3.9 Multiple Drive Wiring

■ Wiring the Main Circuit Terminal

WARNING! *Electrical Shock Hazard. Shut off the power supply to the drive before wiring the main circuit terminals. Failure to comply may result in death or serious injury.*

Note: A cover placed over the DC Bus and braking circuit terminals prior to shipment helps prevent miswiring. Cut away covers as needed for terminals with a needle-nose pliers.

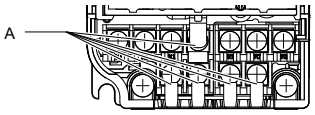

A – Protective Cover to Prevent Miswiring

Main Circuit Connection Diagram

Refer to section ***3.3 Main Circuit Connection Diagram*** on page ***34*** for drive main power circuit connections.

WARNING! *Fire Hazard. The braking resistor connection terminals are B1 and B2. Do not connect braking resistors to any other terminals. Improper wiring connections could cause the braking resistor to overheat and cause death or serious injury by fire. Failure to comply may result in damage to the braking circuit or drive.*

3.7 Control Circuit Wiring

NOTICE: *Do not solder the ends of wire connections to the drive. Soldered wire connections can loosen over time. Improper wiring practices could result in drive malfunction due to loose terminal connections.*

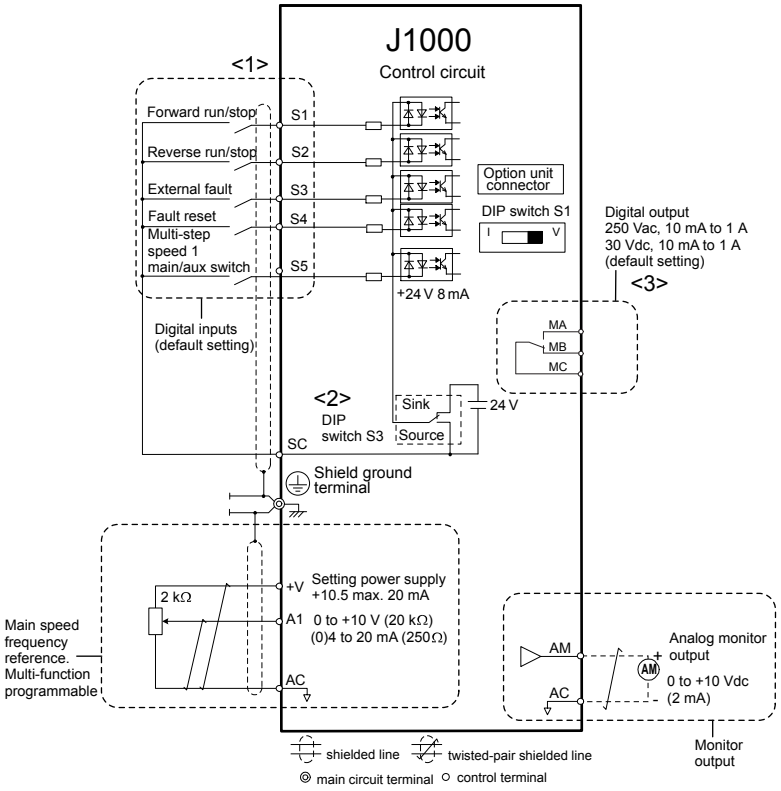

Figure 3.10 Control Circuit Connection Diagram

<1> Connected using sequence input signal (S1 to S5) from NPN transistor; Default: sink mode (0 V com)

<2> Use only the +24 V internal power supply in sinking mode; the source mode requires an external power supply. ***Refer to I/O Connections on page 44***.

<3> Minimum load: 5 Vdc, 10 mA (reference value).

◆ Control Circuit Terminal Block Functions

Drive parameters determine which functions apply to the multi-function digital inputs (S1 to S5), multi-function digital outputs (MA, MB, MC), and multi-function analog output (AM). The default is called out next to each terminal in ***Figure 3.10***.

WARNING! *Sudden Movement Hazard. Always check the operation and wiring of control circuits after being wired. Operating a drive with untested control circuits could result in death or serious injury.*

WARNING! *Confirm the drive I/O signals and external sequence before starting test run. Failure to comply may result in death or serious injury.*

■ Input Terminals

Table 3.6 Control Circuit Input Terminals

Type	No.	Terminal Name (Function)	Function (Signal Level) Default Setting
Multi-Function Digital Inputs	S1	Multi-function input 1 (Closed: Forward run, Open: Stop)	24 Vdc, 8 mA **Note:** Drive preset to sinking mode. When using source mode, set DIP switch S3 to allow for a 24 Vdc (±10%) external power supply. ***Refer to Sinking/Sourcing Mode Switch on page 44***.
	S2	Multi-function input 2 (Closed: Reverse run, Open: Stop)	
	S3	Multi-function input 3 (External fault (N.O.)	
	S4	Multi-function input 4 (Fault reset)	
	S5	Multi-function input 5 (Multi-step speed reference 1)	
	SC	Multi-function input common (Control common)	Sequence common

Type	No.	Terminal Name (Function)	Function (Signal Level) Default Setting
Main Frequency Reference Input	A1	Frequency reference	Input voltage or input current (Selected by DIP switch S1 and H3-01) 0 to +10 Vdc (20 kΩ), Resolution: 1/1000 4 to 20 mA (250 Ω) or 0 to 20 mA (250 Ω), Resolution: 1/500
	+V	Analog input power supply	+10.5 Vdc (max allowable current 20 mA)
	AC	Frequency reference common	0 Vdc

■ Output Terminals

Table 3.7 Control Circuit Output Terminals

Type	No.	Terminal Name (Function)	Function (Signal Level) Default Setting
Multi-Function Digital Output	MA	N.O. output (fault)	Digital output 30 Vdc, 10 mA to 1 A; 250 Vac, 10 mA to 1 A Minimum load: 5 Vdc, 10 mA (reference value)
	MB	N.C. output (fault)	
	MC	Digital output common	
Monitor Output	AM	Analog monitor output	0 to 10 Vdc (2 mA or less) Resolution: 1/256
	AC	Monitor common	0 V

◆ Terminal Configuration

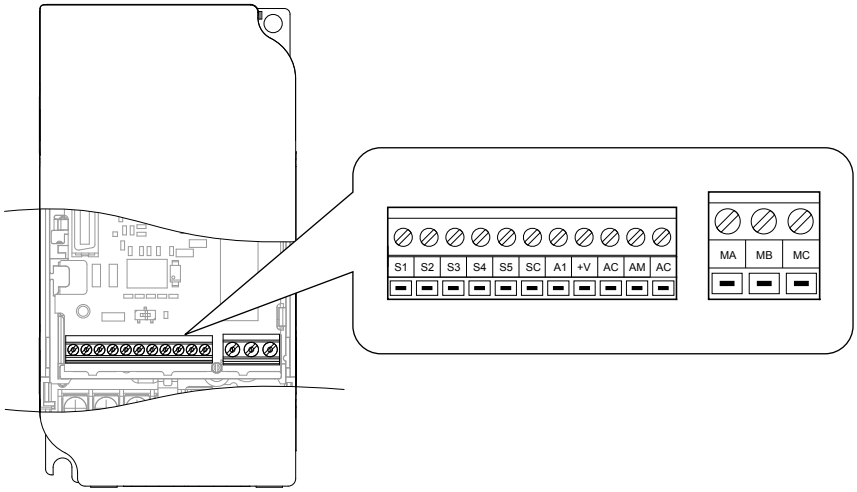

Figure 3.11 Control Circuit Terminal

■ Wire Size and Torque Specifications

Select appropriate wire type and size from *Table 3.8*. For simpler and more reliable wiring, crimp ferrules to the wire ends. Refer to *Table 3.9* for ferrule terminal types and sizes.

Table 3.8 Wire Size and Torque Specifications (Same for All Models)

Terminal	Screw Size	Tightening Torque N•m	Tightening Torque (in-lbs)	Bare Wire Terminal		Ferrule-Type Terminal		
				Applicable wire size mm² (AWG)	Recomm. mm² (AWG)	Applicable wire size mm² (AWG)	Recomm. mm² (AWG)	Wire Type
MA, MB, MC	M3	0.5 to 0.6	4.4 to 5.3	Stranded: 0.25 to 1.5 (24 to 16) Single: 0.25 to 1.5 (24 to 16)	0.75 (18)	0.25 to 1.0 (24 to 17)	0.5 (20)	Shielded line, etc.
S1-S5, SC, +V, A1, AC, AM	M2	0.22 to 0.25	1.9 to 2.2	Stranded: 0.25 to 1.0 (24 to 18) Single: 0.25 to 1.5 (24 to 16)	0.75 (18)	0.25 to 0.5 (24 to 20)	0.5 (20)	

■ Ferrule-Type Wire Terminations

Crimp a ferrule to signal wiring to improve wiring simplicity and reliability. Use CRIMPFOX ZA-3, a crimping tool manufactured by PHOENIX CONTACT.

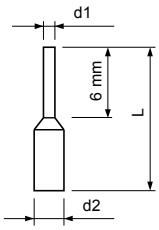

Figure 3.12 Ferrule Dimensions

Table 3.9 Ferrule Terminal Types and Sizes

Size mm^2 (AWG)	Type	L (mm)	d1 (mm)	d2 (mm)	Manufacturer
0.25 (24)	AI 0.25-6YE	10.5	0.8	2.0	PHOENIX CONTACT
0.34 (22)	AI 0.34-6TQ	10.5	0.8	2.0	
0.5 (20)	AI 0.5-6WH	12	1.1	2.5	
0.75 (18)	AI 0.75-6GY	12	1.3	2.8	
1.0	AI 1-6RD	12	1.5	3.0	

◆ Wiring Procedure

This section describes the proper procedures and preparations for wiring the control terminals.

WARNING! *Electrical Shock Hazard. Do not remove covers or touch the circuit boards while the power is on. Failure to comply could result in death or serious injury.*

NOTICE: *Separate control circuit wiring from main circuit wiring (terminals R/L1, S/L2, T/L3, B1, B2, U/T1, V/T2, W/T3, -, +1, +2) and other high-power lines. Improper wiring practices could result in drive malfunction due to electrical interference.*

NOTICE: *Separate wiring for digital output terminals MA, MB and MC from wiring to other control circuit lines. Improper wiring practices could result in drive or equipment malfunction or nuisance trips.*

NOTICE: *Use a class 2 power supply (UL standard) when connecting to the control terminals. Improper application of peripheral devices could result in drive performance degradation due to improper power supply.*

NOTICE: *Insulate shields with tape or shrink tubing to prevent contact with other signal lines and equipment. Improper wiring practices could result in drive or equipment malfunction due to short circuit.*

NOTICE: *Connect the shield of shielded cable to the appropriate ground terminal. Improper equipment grounding could result in drive or equipment malfunction or nuisance trips.*

Wire the control terminals using ***Figure 3.13*** as a guide. Prepare the ends of the control circuit wiring as shown in ***Figure 3.14***. ***Refer to Wire Size and Torque Specifications on page 41***.

NOTICE: *Do not tighten screws beyond the specified tightening torque. Failure to comply may damage the terminal.*

NOTICE: *Use shielded twisted-pair cables as indicated to prevent operating faults. Improper wiring practices could result in drive or equipment malfunction due to electrical interference.*

Connect control wires as shown in the following figure:

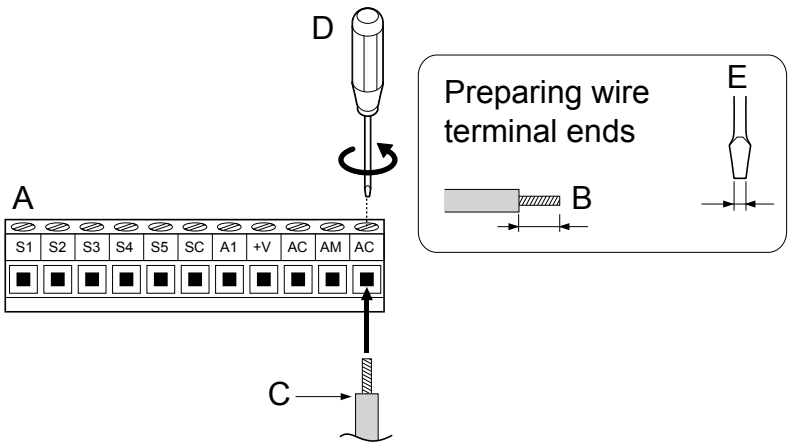

A – Control terminal block
B – Avoid fraying wire strands when stripping insulation from wire. Strip length 5.5 mm.
C – Single wire or stranded wire
D – Loosen screw to insert wire.
E – Blade depth of 0.4 mm or less Blade width of 2.5 mm or less

Figure 3.13 Terminal Board Wiring Guide

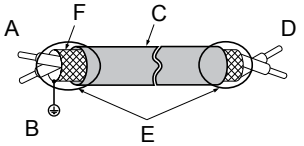

A – Drive side
B – Connect shield to ground terminal of drive.
C – Insulation
D – Control device side
E – Shield sheath (Insulate with tape)
F – Shield

Figure 3.14 Preparing the Ends of Shielded Cables

When setting the frequency by analog reference from an external potentiometer, use shielded twisted-pair wires and ground the shield of twisted-pair wires to the ground terminal of the drive.

NOTICE: *The analog signal lines between the drive and the operator station or peripheral equipment should not exceed 50 meters when using an analog signal from a remote source to supply the frequency reference. Failure to comply could result in poor system performance.*

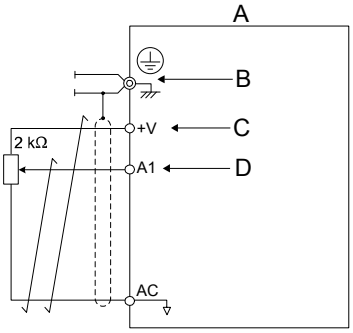

A – Drive
B – Ground terminal (shield connection)
C – (+V) Frequency setting power source +10.5 Vdc maximum 20 mA
D – (A1) Main speed frequency reference 0 to +10 Vdc (20 kΩ)
or
4 to 20 mA (250 Ω)/
0 to 20 mA (250 Ω)

Figure 3.15 Wiring the Frequency Reference to the Control Circuit Terminals (External Reference)

3.8 I/O Connections

◆ Sinking/Sourcing Mode Switch

Set the DIP switch S3 on the front of the drive to switch the digital input terminal logic between sinking mode and sourcing mode; the drive is preset to sinking mode.

Table 3.10 Sinking/Sourcing Mode Setting

Set Value	Details
SINK	Sinking Mode (0 V common): default setting
SOURCE	Sourcing Mode (+24 V common)

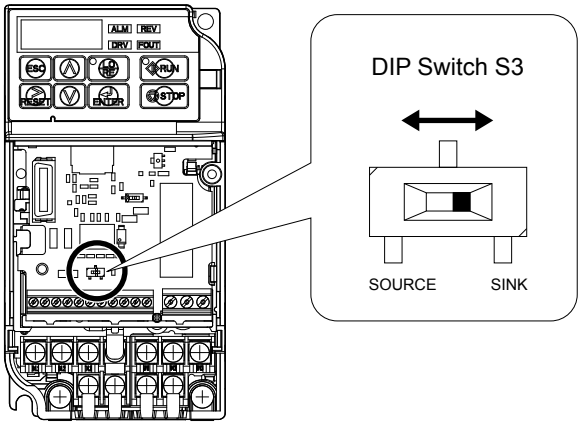

Figure 3.16 DIP Switch S3

■ Transistor Input Signal Using 0 V Common/Sink Mode

When controlling the digital inputs by NPN transistors (0 V common/sinking mode), set the DIP switch S3 to SINK and use the internal 24 V power supply.

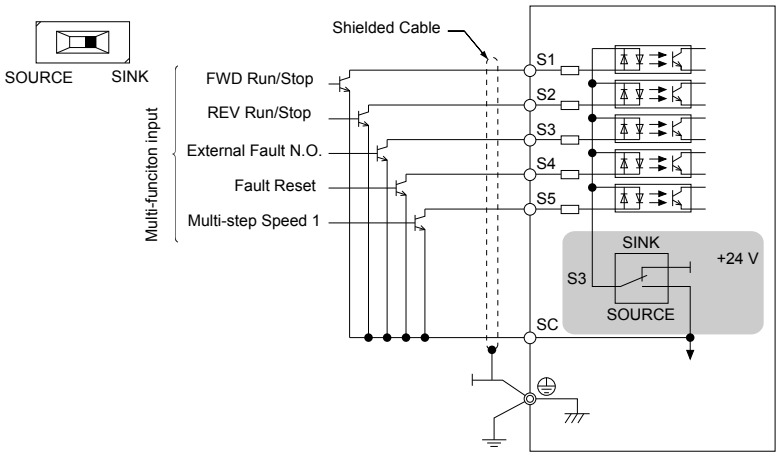

Figure 3.17 Sinking Mode: Sequence from NPN Transistor (0 V Common)

■ Transistor Input Signal Using +24 V Common/Source Mode

When controlling digital inputs by PNP transistors (+24 V common/sourcing mode), set the DIP switch S3 to SOURCE and use an external 24 V power supply.

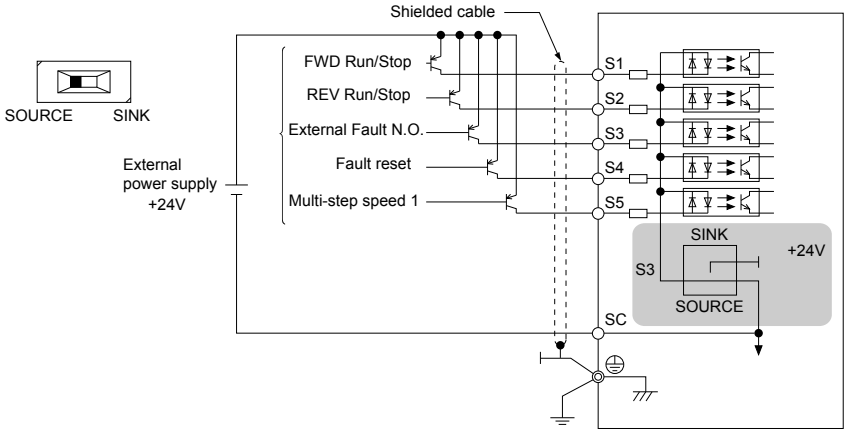

Figure 3.18 Source Mode: Sequence from PNP Transistor (+24 V Common)

3.9 Main Frequency Reference

◆ DIP Switch S1 Analog Input Signal Selection

The main frequency reference can either be a voltage or current signal input at terminal A1.

When using input A1 as a voltage input, set DIP switch S1 to “V” (right position, default setting) and program parameter H3-01 to “0” (0 to +10 Vdc with lower limit) or “1” (0 to +10 Vdc without lower limit).

To use current input at terminal A1, set the DIP switch S1 to "I" and set parameter H3-01 = “2” or “3” (4-20 mA or 0-20 mA).

Table 3.11 Frequency Reference Configurations

Voltage Input	Current Input
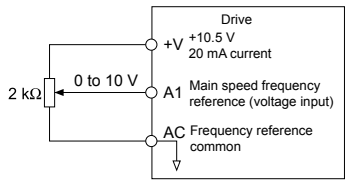	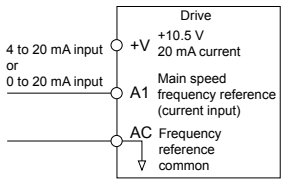

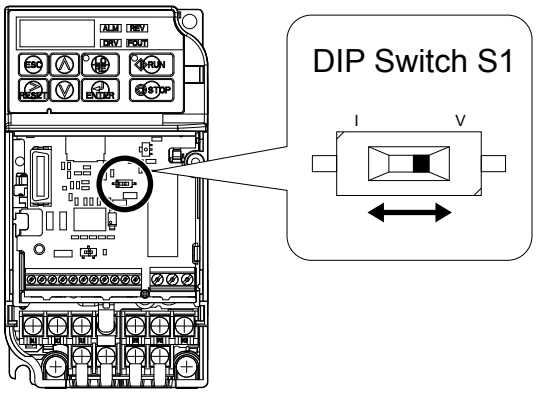

Figure 3.19 DIP Switch S1

Table 3.12 DIP Switch S1 Settings

Setting Value	Description
V (right position)	Voltage input (0 to 10 V): default setting
I (left position)	Current input (4 to 20 mA or 0 to 20 mA)

Table 3.13 Parameter H3-01 Details

No.	Parameter Name	Description	Setting Range	Default Setting	MEMOBUS Register
H3-01	Frequency ref. (voltage/ current) terminal A1 signal level selection	Selects the signal level for terminal A1. 0: 0 to +10 V, unipolar input (negative frequency reference values are zeroed) 1: 0 to +10 V, bipolar input (negative frequency reference changes the direction) 2: 4 to 20 mA 3: 0 to 20 mA	0 to 3	0	0

3.10 Braking Resistor

Dynamic braking (DB) helps bring the motor to a smooth and rapid stop when working with high inertia loads. As the drive lowers the frequency of a motor with high inertia connected, regeneration occurs. This can cause an overvoltage situation when the regenerative energy flows back into the DC bus capacitors. A braking resistor prevents these overvoltage faults.

NOTICE: *Do not allow unqualified personnel to use the product. Failure to comply could result in damage to the drive or braking circuit. Carefully review the braking resistor instruction manual when connecting a braking option to the drive.*

Note: The braking circuit must be sized properly in order to dissipate the power required to decelerate the load in the desired time. Ensure that the braking circuit can dissipate the energy for the set deceleration time prior to running the drive.

NOTICE: *Use a thermal overload relay or an over-temperature contact to interrupt input power to the drive in the event the braking resistor overheats. In the event of a possible thermal overload, the relay will trigger the input contactor and prevent the braking resistor from burning up.*

◆ Installation

WARNING! *Fire Hazard. The braking resistor connection terminals are B1 and B2. Do not connect a braking resistor directly to any other terminals. Improper wiring connections could result in death or serious injury by fire. Failure to comply may result in damage to the braking circuit or drive.*

NOTICE: *Connect braking resistors to the drive as shown in the I/O wiring examples. Improperly wiring braking circuits could result in damage to the drive or equipment.*

■ Installation Procedure

1. Disconnect all electrical power to the drive and wait at least one minute before servicing the drive and any connected components.
2. Remove drive front cover.
3. Use a voltmeter to verify that voltage is disconnected from incoming power terminals and that the DC bus no longer holds a charge.

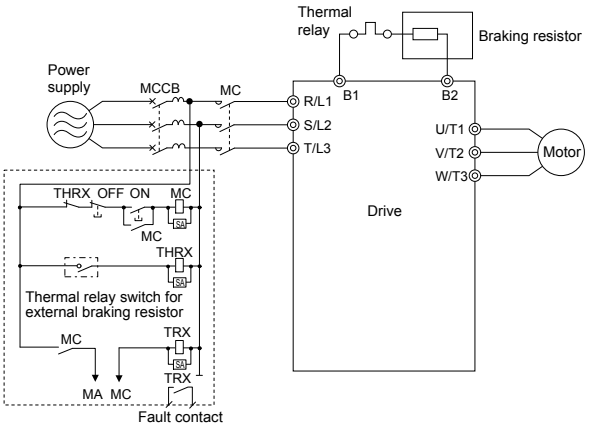

Figure 3.20 Connecting a Braking Resistor

4. Follow manufacturer instructions to connect the resistor unit to the drive using proper wire gauge according to local electrical codes.

   Power leads for the remote mount resistors generate high levels of electrical noise; group these signal leads separately.
5. Mount the resistor unit on a noncombustible surface. Maintain minimum side and top clearances according to resistor manufacturer instructions.

   WARNING! *Fire Hazard. Do not use improper combustible materials. Failure to comply could result in death or serious injury by fire. Attach the drive or braking resistors to metal or other noncombustible material.*
6. Reinstall drive covers and resistor covers, if provided.
7. Set parameter L3-04 = “0” to disable stall prevention during deceleration.
   Set parameter L8-01 to “1” to enable overheat protection when using a heatsink-mounted braking resistor option.
   Set L8-01 = “0” for other braking resistor types.

Table 3.14 Braking Resistor Settings

Parameter	Settings
L8-01: Internal Dynamic Braking Resistor Protection Selection	0: Disabled. The drive will not provide overheat protection. Supply separate means of overheat protection. 1: Enabled. Braking Resistor is protected from overheat.
L3-04: Stall Prevention During Deceleration	0: Stall prevention disabled.

8. Operate the system and verify the required deceleration rate is obtained during dynamic braking or stopping.

3.11 Interlocking with Connected Machinery

For safety reasons, applications that may be affected by the operation status of the drive should be set up so that operation can only occur when the drive is ready to operate. A "Drive ready" and "Fault" signal should be assigned to the multi-function outputs to guarantee interlock with application.

◆ Drive Ready Signal

The "Drive ready" signal is output to one of the multi-function terminals after the drive has booted up and there is no fault present. It indicates that the drive is ready for operation.

- The power is off.
- A fault situation is present.
- There is a problem with the drive internal power supply.
- Parameter settings restrict a Run command from being entered.
- An overvoltage or undervoltage situation is present so that when the Run command is given a fault is immediately triggered.
- The drive is in the programming mode and parameter settings restrict a Run command from being entered in the programming mode.

3.12 Wiring Checklist

☑	No.	Item	Page
		Drive, peripherals, option cards	
☐	1	Check drive model number to ensure receipt of correct model.	*17*
☐	2	Check for correct braking resistors, DC reactors, noise filters, and other peripheral devices.	*47*
		Installation area and physical setup	
☐	3	Ensure area surrounding the drive complies with specifications.	*26*
		Power supply voltage, output voltage	
☐	4	The voltage from the power supply should fall within the input voltage specification range of the drive.	*86*
☐	5	The voltage rating for the motor should match the drive output specifications.	*17*
		Main circuit wiring	
☐	6	Confirm proper branch circuit protection exists per National and Local codes.	*32*
☐	7	Properly wire the power supply to drive terminals R/L1, S/L2 and T/L3.	*34*
☐	8	Properly wire the drive and motor together. The motor lines and drive output terminals R/T1, V/T2 and W/T3 should match in order to produce the desired phase order. If the phase order is incorrect, the drive will rotate in the opposite direction.	*38*
☐	9	Use 600 Vac vinyl-sheathed wire for the power supply and motor lines.	*37*
☐	10	Use the correct wire gauges for the main circuit. ***Refer to Wire Gauge and Torque Specifications on page 37***, ***Table 3.2***, or ***Table 3.3***.	*37*
		• When using comparatively long motor cable, calculate the amount of voltage drop. Motor rated voltage (V) x 0.02 ≥ 3 x voltage resistance (Ω/km) x cable length (m) x motor rated current (A) x 10^{-3}	*37*
		• If the cable between the drive and motor exceeds 50 m, adjust the carrier frequency (C6-02) accordingly.	*38*
☐	11	Properly ground the drive. Review page *38*.	*38*
☐	12	Tightly fasten all terminal screws (control circuit terminals, grounding terminals). ***Refer to Wire Gauge and Torque Specifications on page 37***, ***Table 3.2***, or ***Table 3.3***.	*37*
☐	13	Set up overload protection circuits when running multiple motors from a single drive. 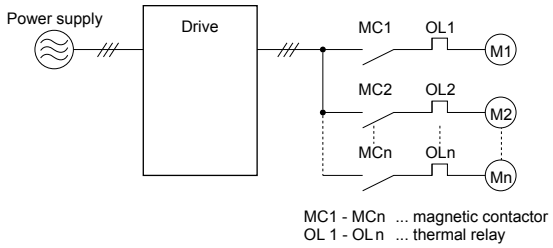 **Note:** Close MC1 through MCn before operating the drive.	-
☐	14	If using a braking resistor or dynamic braking resistor unit, install a magnetic contactor. Properly install the resistor, and ensure that overload protection shuts off the power supply.	*47*
☐	15	Verify phase advancing capacitors are NOT installed on the output side of the drive.	-
		Control circuit wiring	
☐	16	Use twisted-pair cables for all drive control circuit wiring.	*40*
☐	17	Ground the shields of shielded wiring to the GND ⏚ terminal.	*42*
☐	18	If using a 3-Wire sequence, properly set parameters for multi-function contact input terminals S1 through S5, and properly wire control circuits.	*33*
☐	19	Check for any other wiring mistakes. Only use a multimeter to check wiring.	-
☐	20	Properly fasten the control circuit terminal screws in the drive. ***Refer to Wire Gauge and Torque Specifications on page 37***, ***Table 3.2***, or ***Table 3.3***.	*37*
☐	21	Pick up all wire clippings.	-
☐	22	Ensure that no frayed wires on the terminal block are touching other terminals or connections.	-
☐	23	Properly separate control circuit wiring and main circuit wiring.	-
☐	24	Analog signal line wiring should not exceed 50 m.	-

This Page Intentionally Blank

4

Start-Up Programming & Operation

This chapter explains the functions of the LED operator and how to program the drive for initial operation.

4.1 SECTION SAFETY....52
4.2 USING THE DIGITAL LED OPERATOR....54
4.3 THE DRIVE AND PROGRAMMING MODES....57
4.4 START-UP FLOWCHART....62
4.5 POWERING UP THE DRIVE....63
4.6 NO-LOAD OPERATION TEST RUN....64
4.7 TEST RUN WITH LOAD CONNECTED....65
4.8 VERIFYING AND BACKING UP PARAMETER SETTINGS....66
4.9 TEST RUN CHECKLIST....67

4.1 Section Safety

⚠ DANGER

Electrical Shock Hazard

Do not connect or disconnect wiring while the power is on.

Failure to comply will result in death or serious injury.

⚠ WARNING

Electrical Shock Hazard

Do not operate equipment with covers removed.

Failure to comply could result in death or serious injury.

The diagrams in this section may include drives without covers or safety shields to illustrate details. Be sure to reinstall covers or shields before operating the drives and run the drives according to the instructions described in this manual.

Always ground the motor-side grounding terminal.

Improper equipment grounding could result in death or serious injury by contacting the motor case.

Do not touch any terminals before the capacitors have fully discharged.

Failure to comply could result in death or serious injury.

Before wiring terminals, disconnect all power to the equipment. The internal capacitor remains charged even after the power supply is turned off. The charge indicator LED will extinguish when the DC bus voltage is below 50 Vdc. To prevent electric shock, wait at least one minute after all indicators are off and measure the DC bus voltage level to confirm safe level.

Do not allow unqualified personnel to perform work on the drive.

Failure to comply could result in death or serious injury.

Installation, maintenance, inspection, and servicing must be performed only by authorized personnel familiar with installation, adjustment and maintenance of AC drives.

Do not perform work on the drive while wearing loose clothing, jewelry or without eye protection.

Failure to comply could result in death or serious injury.

Remove all metal objects such as watches and rings, secure loose clothing, and wear eye protection before beginning work on the drive.

Do not remove covers or touch circuit boards while the power is on.

Failure to comply could result in death or serious injury.

Fire Hazard

Tighten all terminal screws to the specified tightening torque.

Loose electrical connections could result in death or serious injury by fire due to overheating of electrical connections.

Do not use an improper voltage source.

Failure to comply could result in death or serious injury by fire.

Verify that the rated voltage of the drive matches the voltage of the incoming power supply before applying power.

Do not use improper combustible materials.

Failure to comply could result in death or serious injury by fire.

Attach the drive to metal or other noncombustible material.

NOTICE

Observe proper electrostatic discharge procedures (ESD) when handling the drive and circuit boards.

Failure to comply may result in ESD damage to the drive circuitry.

Never connect or disconnect the motor from the drive while the drive is outputting voltage.

Improper equipment sequencing could result in damage to the drive.

Do not use unshielded cable for control wiring.

Failure to comply may cause electrical interference resulting in poor system performance. Use shielded twisted-pair wires and ground the shield to the ground terminal of the drive.

Do not allow unqualified personnel to use the product.

Failure to comply could result in damage to the drive or braking circuit.

Carefully review instruction manual TOBPC72060000 when connecting a braking option to the drive.

Do not modify the drive circuitry.

Failure to comply could result in damage to the drive and will void warranty.

Yaskawa is not responsible for any modification of the product made by the user. This product must not be modified.

Check all the wiring to ensure that all connections are correct after installing the drive and connecting any other devices.

Failure to comply could result in damage to the drive.

4.2 Using the Digital LED Operator

Use the LED operator to enter run and stop commands, display data, edit parameters, as well as display fault and alarm information.

◆ Keys, Displays, and LEDs

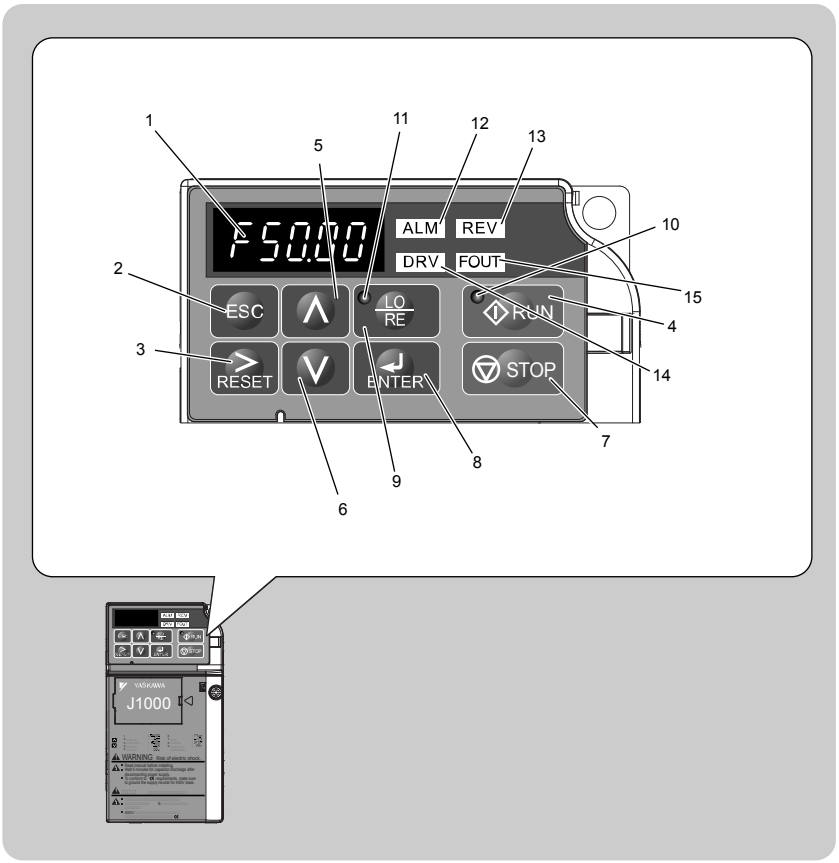

Table 4.1 Keys and Displays on the LED Operator

No.	Display	Name	Function
1	F50.00	Data Display Area	Displays the frequency reference, parameter number, etc.
2	ESC	ESC Key	Returns to the previous menu.
3	RESET	RESET Key	Moves the cursor to the right. Resets the drive to clear a fault situation.
4	RUN	RUN Key	Starts the drive.
5	∧	Up Arrow Key	Scrolls up to select parameter numbers, setting values, etc.
6	∨	Down Arrow Key	Scrolls down to select parameter numbers, setting values, etc.
7	STOP	STOP Key	Stops the drive. **Note:** Stop priority circuit. A fast-stop is available by pressing the STOP key when the drive detects a danger even if the drive is running by a signal from the multi-function contact input terminal (REMOTE is set). To avoid stoppage by using the STOP key, set o2-02 (STOP Key Function Selection) to 0 (Disabled).
8	ENTER	ENTER Key	Selects all modes, parameters, settings, etc. Selects a menu item to move from one display screen to the next.
9	LO RE	LO/RE Selection Key	Switches drive control between the operator (LOCAL) and the control circuit terminals (REMOTE). **Note:** LOCAL/REMOTE key effective during stop in drive mode.
10	RUN	RUN Light	Lit while the drive is operating the motor.
11	LO RE	LO/RE Light	Lit while the operator (LOCAL) is selected to run the drive.

No.	Display	Name	Function
12	ALM	ALM LED Light	*Refer to LED Screen Displays on page 55*.
13	REV	REV LED Light	
14	DRV	DRV LED Light	
15	FOUT	FOUT LED Light	

◆ Digital Text Display

Text appears on the LED Operator as shown below. This section explains the meaning of text as it appears on the display screen.

Lit	Flashing
A1-03	A1-03

Table 4.2 Digital Text Display

Text	LED	Text	LED	Text	LED	Text	LED
0	0	9	9	I	i	R	r
1	1	A	A	J	j	S	S
2	2	B	b	K	k	T	t
3	3	C	C	L	l	U	U
4	4	D	d	M	m <1>	V	v
5	5	E	E	N	n	W	w <1>
6	6	F	F	O	o	X	none
7	7	G	G	P	p	Y	y
8	8	H	H	Q	q	Z	none

<1> Displayed in two digits.

◆ LED Screen Displays

Display	Lit	Flashing	Off
ALM	When the drive detects an alarm or error	• When an alarm occurs • oPE detected	Normal state (no fault or alarm)
REV	Motor is rotating in reverse	—	Motor is rotating forward
DRV	Drive Mode	—	Programming Mode
FOUT	Displays output frequency (Hz)	—	—
As illustrated in this manual	F 0.00 DRV	Er-03	F 0.00 DRV

◆ LO/RE LED and RUN LED Indications

LED	Lit	Flashing	Flashing Quickly <1>	Off
LO RE	When run command is selected from LED operator (LOCAL)	—	—	Run command is selected from device other than LED operator (REMOTE)
RUN	During run	• During deceleration to stop • When a run command is input and frequency reference is 0	• During deceleration at a fast-stop. • During stop by interlock operation.	During stop
As shown	RUN	RUN	RUN	RUN

<1> Refer to *Figure 4.1* for the difference between “flashing” and “flashing quickly”.

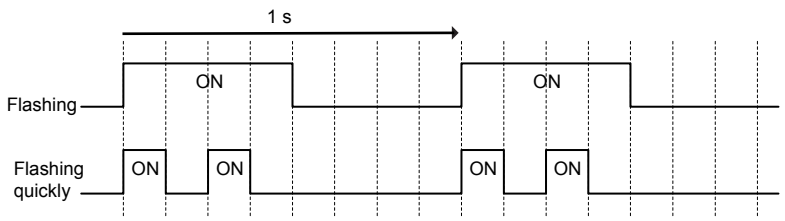

Figure 4.1 RUN LED Status and Meaning

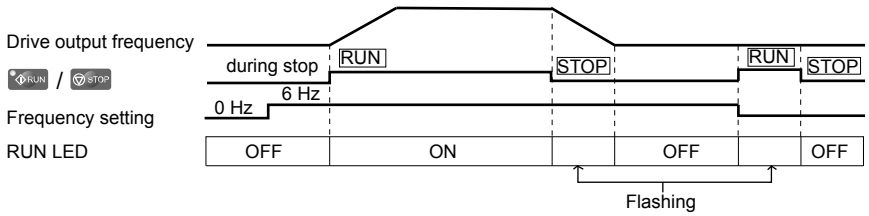

Figure 4.2 RUN LED and Drive Operation

◆ Menu Structure for Digital LED Operator

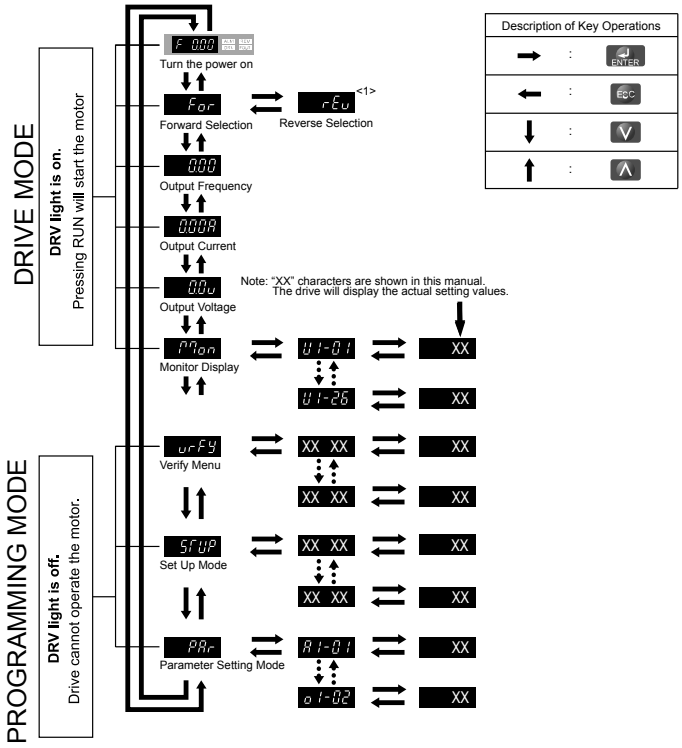

Figure 4.3 Digital LED Operator Screen Structure

<1> Reverse can only be selected when LOCAL is set.

4.3 The Drive and Programming Modes

The drive functions are divided into two main groups accessible via the Digital LED Operator:

Drive Mode: The Drive mode allows motor operation and parameter monitoring. Parameter settings cannot be changed when accessing functions in the Drive Mode *(Table 4.3)*.

Programming Mode: The Programming Mode allows access to setup/adjust, verify parameters. The drive prohibits changes in motor operation such as start/stop when the Digital LED Operator is accessing a function in the Programming Mode.

Table 4.3 illustrates the different functions visible as the "Up arrow" is scrolled immediately after powering up the drive.

Note: When b1-08 (Run Command Selection while in Programming Mode) is set to 1 (enabled), the drive can run even if the mode is switched to the programming mode. When setting b1-08 to 0 (disabled), the mode cannot be switched to the programming mode while the drive is running.

Table 4.3 Summary of Modes

Mode Group	Description	Key Press	LED Digital Operator Display
Drive Mode Functions (Motor operation and monitoring)	Frequency Reference Display (Initial power-up state)	∧	F 0.00 DRV
	Forward/Reverse	∧	For DRV
	Output Frequency Display	∧	0.00 DRV FOUT
	Output Current Display	∧	0.00A DRV
	Output Voltage Reference	∧	0.0u DRV
	Monitor Display	∧	Mon DRV
Programming Mode Functions (Changing parameters)	Verify Function	∧	vrfy
	Setup Group Parameters	∧	Srup
	All Parameters	∧	PAr

◆ Navigating the Drive and Programming Modes

The drive is set to operate in Drive Mode when it is first powered up. Switch between display screens by using the ∧ and ∨ keys.

Power Up	Frequency Reference F 0.00 DRV Default Setting	This display screen allows the user to monitor and set the frequency reference while the drive is running. *Refer to The Drive and Programming Modes on page 57*. **Note:** The user can select items to display when the drive is first powered up by setting parameter o1-02.
Drive Mode	∧ ↓ ↑ ∨	
	Forward/Reverse For DRV	For: Motor rotates forward.
		rEv: Motor rotates in reverse.
		Note: For applications that should not run in reverse (fans, pumps, etc.), set parameter b1-04 = "1" to prohibit the motor from rotating in reverse. This sequence also puts the drive in LOCAL mode. Switching to reverse: rEv For → LO/RE → ENTER → For → ∧ → The LED is lit when LOCAL is selected rEv → ENTER
	∧ ↓ ↑ ∨	
	Output Frequency Display 0.00 DRV FOUT	Monitors the frequency output by the drive.
	∧ ↓ ↑ ∨	
	Output Current Display 0.00A DRV	Monitors the output current of the drive.
	∧ ↓ ↑ ∨	

Start-Up Programming & Operation

4

Drive Mode	Output Voltage Reference 0.0u DRV	Monitors the output voltage of the drive.
	∧ ↓ ↑ ∨	
	Monitor Display mon DRV	Monitor parameters (U parameters) are displayed.
Programming Mode	∧ ↓ ↑ ∨	
	Verify Function vrfy	Lists all parameters that have been edited or changed from default settings.➡ *Refer to Verifying Parameter Changes: Verify Menu on page 59*.
	∧ ↓ ↑ ∨	
	Setup SEtUP	A select list of parameters necessary to get the drive operational quickly.➡ *Refer to The Setup Group within the Programming Mode on page 59*.
	∧ ↓ ↑ ∨	
	Parameter Setting PAr	Allows the user to access and edit all parameter settings.➡ *Refer to Parameter List on page 171*.
	∧ ↓ ↑ ∨	
Drive Mode	Frequency Reference F 0.00 DRV	Returns to the frequency reference display screen.

■ Drive Mode Details

The following actions are possible in the Drive Mode:

- Run and stop the drive.
- Monitor the operation status of the drive (frequency reference, output frequency, output current, output voltage, etc.).
- View information on an alarm.

Note: Select "Drive Mode" when running. The mode can be switched to any mode (program mode, etc.) other than drive mode while the drive is stopped. However, the drive cannot be operated in other modes. Return the mode to "Drive Mode" after completing periodic inspection.

Figure 4.4 illustrates changing the default frequency reference of F 0.00 (0 Hz) to F 6.00 (6 Hz) while in Drive Mode. This example assumes the drive is set to LOCAL.

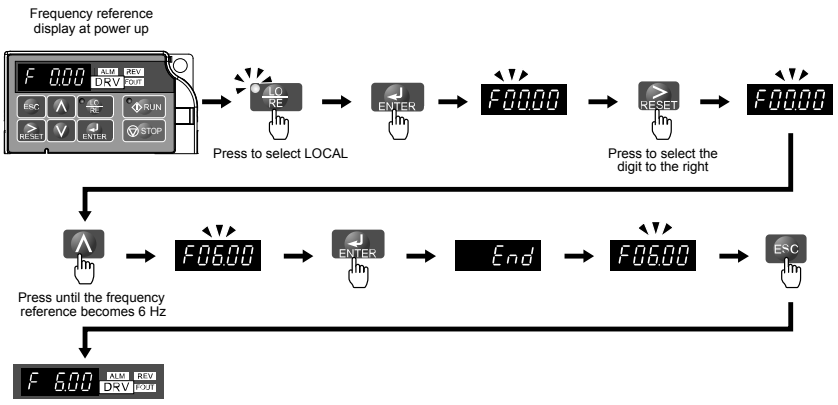

Figure 4.4 Setting the Frequency Reference while in Drive Mode

Note: The drive will not accept a frequency reference set value unless the ENTER key is pressed after the frequency reference is entered. This feature prevents accidental setting of the frequency reference. By setting o2-05 (Frequency Reference Setting Method Selection) to 1 (Enabled), the drive will accept the frequency reference while it is being adjusted on the digital operator.

■ Programming Mode Details

The following actions are possible in the programming mode:

- **Verify Function:** Verify parameter setting changes from original default values.
- **Setup Group:** Access a list of commonly used parameters to simplify setup.
- **Parameter Setting Mode:** Access and edit all parameter settings.

The Setup Group within the Programming Mode

In Setup Group, the user can access the minimum group of parameters required to operate the application.

Note: Setup Group parameters are listed in *Table 4.4*.

Figure 4.5 illustrates the keys to press to enter the Setup Group.

In this example, the source of the frequency reference is changed from the control circuit terminals to the LED Operator (i.e., b1-01 is changed from 1 to 0).

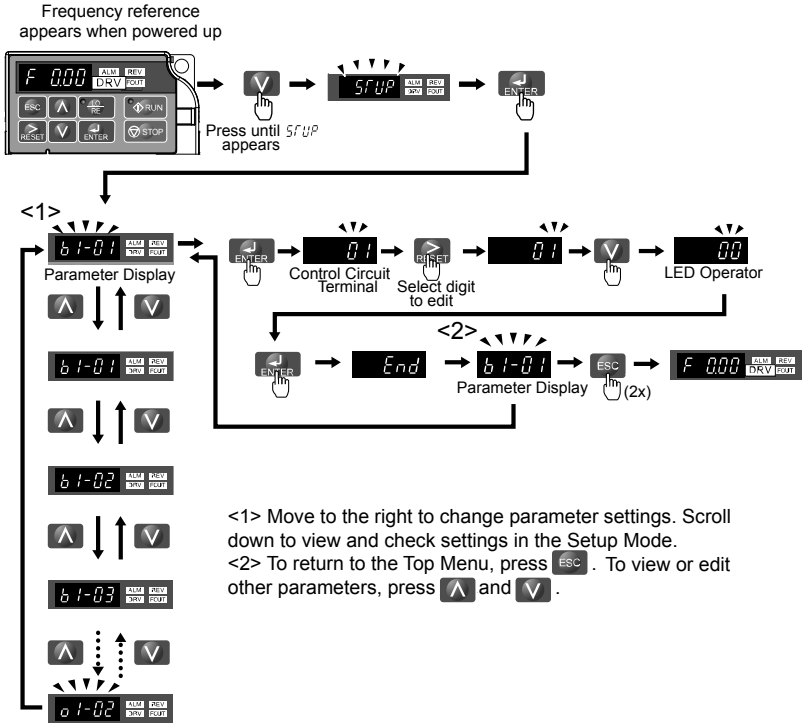

Figure 4.5 Setup Group Example

◆ Changing Parameter Settings or Values

This example explains changing C1-01 (Acceleration Time 1) from 10.0 seconds (default) to 20.0 seconds.

	Step		Display/Result
1.	Turn on the power to the drive. The initial display appears.	→	F 0.00 DRV
2.	Press the ∧ key until the Setup Mode Screen appears.	→	SETUP
3.	Press the ENTER key to view the parameter setting display.	→	b1-01
4.	Scroll through parameters by pressing the ∧ key until C1-01 appears.	→	C1-01
5.	Press ENTER to view the current setting value (10.0). (Number farthest to the left flashes)	→	0010.0
6.	Press RESET until the desired number is selected. (“1” flashes)	→	0010.0
7.	Press the ∧ key and enter 0020.0.	→	0020.0
8.	Press ENTER and the drive will confirm the change.	→	End
9.	The display automatically returns to the screen shown in Step 4.	→	C1-01
10.	Press the ESC key until back at the initial display.	→	F 0.00 DRV

◆ Verifying Parameter Changes: Verify Menu

The Verify Menu lists edited parameters from the Programming Mode. The Verify Menu helps determine which settings have been changed, and is particularly useful when replacing a drive. If no settings have been changed the Verify Menu will read nonE. The Verify menu also allows users to access and re-edit edited parameters.

Note: The Verify Menu will not display parameters from the A1 group even if those parameters have been changed from default settings.

The following example is a continuation of the steps beginning on page 59. Here, parameter C1-01 is accessed using the Verify Menu and is changed again to 20.0 s.

To check the list of edited parameters:

	Step		Display/Result
1.	Turn on the power to the drive. The initial display appears.	→	F 0.00 DRV
2.	Press ∧ until the display shows the "Verify" representation.	→	vrFy
3.	Press ENTER to enter the list of parameters that have been edited from their original default settings. Scroll through the list by pressing the ∧ key.	→	b1-01
4.	Press the ∧ key until C1-01 appears.	→	C1-01
5.	Press the ENTER key to access the setting value. (number farthest to the left flashes)	→	0020.0

◆ Switching Between LOCAL and REMOTE

Entering the run command using the LED operator is referred to as LOCAL, while entering the run command from an external device via the control circuit terminals or network option unit is referred to as REMOTE.

WARNING! *Sudden Movement Hazard. The drive may start unexpectedly if the Run command is already applied when switching from LOCAL mode to REMOTE mode when b1-07 = 1, resulting in death or serious injury. Be sure all personnel are clear of rotating machinery and electrical connections prior to switching between LOCAL mode and REMOTE mode.*

There are two ways to switch between LOCAL and REMOTE.

Note: 1. After selecting LOCAL, the LO/RE light will remain lit.
2. The drive will not allow the user to switch between LOCAL and REMOTE during run.

■ Using the LO/RE Key on the LED Operator

	Step		Display/Result
1.	Turn on the power to the drive. The initial display appears.	→	F 0.00 DRV
2.	Press LO/RE. The LO/RE light will light up. The drive is now in Local. To set the drive for REMOTE operation, press the LO/RE key again.	→	F50.00 DRV LO/RE → LO/RE

■ Using Input Terminals S1 through S5 to Switch between LO/RE

Switch between LOCAL and REMOTE using one of the digital input terminals S1 through S5 (set the corresponding parameter H1-01 through H1-05 to "1").

Follow the example below to set the digital input terminals.

Note: 1. For a list of digital input selections, *Refer to Parameter List on page 171*.
2. Setting a multi-function input terminal to a value of 1 disables the LO/RE key on the LED operator.

◆ Parameters Available in the Setup Group

■ Setup Mode (STUP)

Parameters used for this drive are classified into A to U. To simplify the drive setup, frequently used parameters are selected and input into Setup Mode.

1. To set a parameter, the Setup Mode must be displayed first. Press the Up/Down key until STUP is displayed.
2. Select the parameter and change the setting. *Table 4.4* lists parameters available in the Setup group. If the desired parameter cannot be set in the Setup mode, use the Parameter Setting mode.

Table 4.4 Setup Group Parameters

Parameter	Name	Parameter	Name
b1-01	Frequency Reference Selection	C6-01	Duty Selection
b1-02	Run Command Selection	C6-02	Carrier Frequency Selection
b1-03	Stop Method Selection	d1-01	Frequency Reference 1
C1-01	Acceleration Time 1	d1-02	Frequency Reference 2
C1-02	Deceleration Time 1	d1-03	Frequency Reference 3

Parameter	Name
d1-04	Frequency Reference 4
d1-17	Jog Frequency Reference
E1-01	Input Voltage Reference
E1-04	Maximum Output Frequency
E1-05	Maximum Voltage
E1-06	Base Frequency

Parameter	Name
E1-09	Minimum Output Frequency
E2-01	Motor Rated Current
H4-02	Terminal AM Gain Setting
L1-01	Motor Protection Function Selection
L3-04	Stall Prevention Selection during Deceleration

4.4 Start-up Flowchart

This section summarizes the basic steps required to start the drive. The flowchart is intended as a quick reference to help familiarize the user with start-up procedures.

◆ Flowchart: Basic Start-up

Figure 4.6 describes basic start-up sequence for the drive and motor system. This sequence varies slightly depending on application. Use drive default parameter settings in simple applications that do not require high precision.

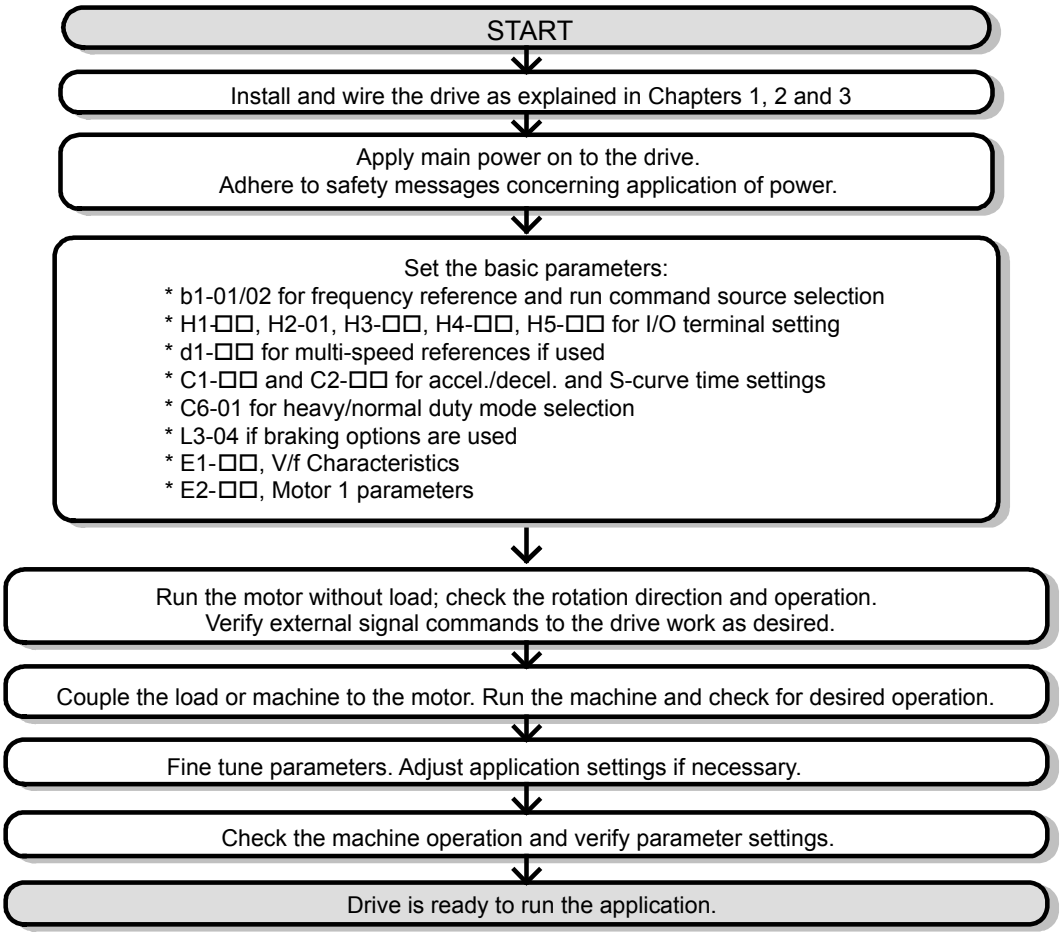

Figure 4.6 Basic Start-Up

4.5 Powering Up the Drive

◆ Powering Up the Drive and Operation Status Display

■ Powering Up the Drive

Review the following checklist before turning the power on.

Item to Check	Description
Power supply voltage	Ensure the power supply voltage is correct: 200 V class: single-phase 200 to 240 Vac 50/60 Hz 200 V class: 3-phase 200 to 240 Vac 50/60 Hz 400 V class: 3-phase 380 to 480 Vac 50/60 Hz
	Properly wire the power supply input terminals (R/L1, S/L2, T/L3). (for single-phase 200 V class models, wire only R/L1 and S/L2)
	Check for proper grounding of drive and motor.
Drive output terminals and motor terminals	Properly wire drive output terminals U/T1, V/T2, and W/T3 with motor terminals U, V, and W.
Control circuit terminals	Check control circuit terminal connections.
Drive control terminal status	Open all control circuit terminals (off).
Status of the load and connected machinery	Uncouple the motor from the load.

■ Status Display

When the power supply to the drive is turned on, the LED operator lights will appear as follows:

No.	Name	Description
Normal Operation		The data display area displays the frequency reference.DRV is lit.
Fault	 Main circuit low voltage (ex)	Data displayed varies by the type of fault. ***Refer to Fault Displays, Causes and Possible Solutions on page 125*** for more information and possible solution.ALM and DRV are lit.

◆ V/f Pattern Setting

Setting the V/f pattern according to the application. ***Refer to E: Motor Parameters on page 86*** for details on setting the V/f pattern.

■ Notes when Setting the V/f Pattern

Set the maximum output frequency to match the motor characteristics.

If the V/f pattern voltage is increased motor torque may also increase. However, if the V/f voltage is set too high these problems may occur:

- Excessive motor current.
- Motor overheat or vibration.

4.6 No-Load Operation Test Run

◆ No-Load Operation Test Run

This section explains how to operate the drive with the motor uncoupled from the load during a test run.

■ Before Starting the Motor

Check the following items before operation:

- Ensure the area around the motor is safe.
- Ensure external emergency stop circuitry is working properly and other safety precautions have been taken.

■ During Operation

Check the following items during operation:

- The motor should rotate smoothly (i.e., no abnormal noise or oscillation).
- The motor should accelerate and decelerate smoothly.

■ No-Load Operation Instructions

The following example illustrates a test run procedure using the digital operator.

Note: Before starting the motor, set the frequency reference d1-01 to 6 Hz.

	Step		Display/Result
1.	Turn on the power to the drive. The initial display appears.	➡	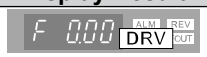
2.	Press the LO/RE key to select LOCAL. The LO/RE LED will turn on.	➡	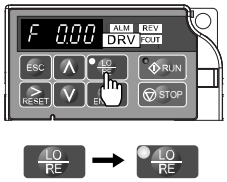
3.	Press RUN to give the drive a Run command. RUN will light and the motor will rotate at 6 Hz.	➡	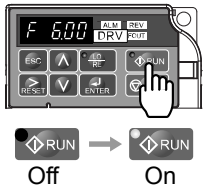
4.	Ensure the motor is rotating in the correct direction and no faults or alarms occur.	➡	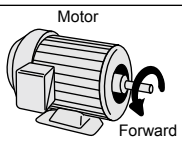
5.	If there is no error in step 4, press ∧ to increase the frequency reference. Increase the frequency in 10 Hz increments verifying smooth operation results at all speeds. For each frequency, monitor the drive output current (U1-03) through the LED operator to confirm the current is well below the motor rated current. Example: 6 Hz → 50 Hz.		
6.	The drive should operate normally. Press STOP to stop the motor. RUN flashes until the motor comes to a complete stop.	➡	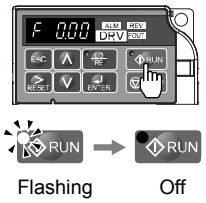

4.7 Test Run with Load Connected

◆ Test Run with the Load Connected

After performing a no-load test run connect the motor and proceed to run the motor and load together.

■ Notes on Connected Machinery

- Clear the area around the motor.
- The motor should come to a complete stop without problems.
- Connect the machinery.
- Fasten all installation screws properly. Check that the motor and connected machinery are held in place.
- Confirm that the Fast-stop circuit or mechanical safety measures operate correctly.
- Be ready to press the STOP button in case of emergency.

■ Checklist Before Operation

- The motor should rotate in the proper direction.
- The motor should accelerate and decelerate smoothly.

■ Operating the Motor under Loaded Conditions

Test run the application similarly to the no-load test procedure when connecting the machinery to the motor.

- Check monitor parameter U1-03 to ensure there is no overcurrent.
- If the application permits running the load in the reverse direction, try changing motor direction and the frequency reference while watching for abnormal motor oscillation or vibration.
- Correct any problems that occurs with hunting, oscillation, or other control-related issues.

4.8 Verifying and Backing Up Parameter Settings

Check changes to parameter settings using the Verify function. *Refer to Verifying Parameter Changes: Verify Menu on page 59*.

Save the verified parameter settings. Change the access level or set a password to the drive to prevent accidental modification of parameter settings.

◆ Parameter Access Level: A1-01

Setting the Access Level for "Operation only" (A1-01 = 0) allows the user to access parameters A1-□□ and U□-□□ only. Other parameters are not displayed.

No.	Parameter Name	Description	Setting Range	Default
A1-01	Access Level Selection	Selects which parameters are accessible via the digital operator. 0: Operation only (A1-01 and A1-04 can be set and monitored. U parameters can be monitored) 2: Advanced Access Level (All parameters can be set and monitored)	0,2	2

◆ Password Settings: A1-04, A1-05

The user can set a password to the drive to restrict access. The password is selected via parameter A1-05. The selected password must be entered in parameter A1-04 to unlock parameter access (i.e., parameter setting A1-04 must match the value programmed into A1-05). The following parameters cannot be viewed or edited until the value programmed into A1-04 correctly matches the value as programmed in parameter A1-05: A1-01 and A1-03.

Note: Parameter A1-05 is hidden from view. To display A1-05, access parameter A1-04 and simultaneously depress the STOP key and the ∧ key.

◆ Copy Function (Optional)

Parameter settings can be copied to another drive to simplify parameter restoration or multiple drive setup. The drive supports the following options:

■ USB/Copy Unit

The copy unit is an external option connected to the drive to copy parameter settings to another drive. It includes a USB adapter to connect the drive to a PC.

■ Drive Wizard

Drive Wizard is a PC software tool for parameter management, monitoring, and diagnosis. Drive Wizard can load, store, and copy drive parameter settings. For details, refer to Help in the Drive Wizard software.

4.9 Test Run Checklist

Review the checklist before performing a test run. Check each item that applies.

☑	No.	Checklist	Page
☐	1	Thoroughly read the manual before performing a test run.	—
☐	2	Turn the power on.	63
☐	3	Set the voltage for the power supply to E1-01.	86

Check the items that correspond to the control mode being used.

WARNING! *Ensure start/stop and safety circuits are wired properly and in the correct state before energizing the drive. Failure to comply could result in death or serious injury from moving equipment. When programmed for 3-Wire control, a momentary closure on terminal S1 may cause the drive to start.*

☑	No.	Checklist	Page
☐	4	The DRV should illuminate after giving a run command.	—
☐	5	To give a run command and frequency reference from the LED Digital Operator, press LO/RE to set to LOCAL. The LO/RE key lights while LOCAL is displayed.	60
☐	6	If the motor rotates in the opposite direction during the test run, switch two of the drive output terminals (U/T1, V/T2, W/T3).	63
☐	7	Select the correct duty rating (C6-01) for the application.	—
☐	8	Set the correct values for the motor rated current (E2-01) and the motor protection selection (L1-01) to ensure motor thermal protection.	—
☐	9	If the run command and frequency reference are provided via the control circuit terminals, set the drive for REMOTE and be sure the LO/RE light is out.	60
☐	10	If the control circuit terminals should supply the frequency reference, select the correct voltage input signal level (0 to 10 V) or the correct current input signal level (4 to 20 mA or 0 to 20 mA).	60
☐	11	Set the proper voltage to terminal A1. (0 to 10 V).	72
☐	12	When current input is used, switch the drive built-in DIP switch S1 from the V-side (OFF) to I-side (ON).	—
☐	13	Set the minimum and maximum frequency references to the desired values. Make the following adjustments if the drive does not operate as expected: Gain adjustment: Set the maximum voltage/current signal and adjust the analog input gain (H3-03) until the frequency reference value reaches the desired value. Bias adjustment: Set the minimum voltage/current signal and adjust the analog input bias (H3-04) until the frequency reference value reaches the desired minimum value.	—

This Page Intentionally Blank

5

Parameter Details

5.1 A: INITIALIZATION....70
5.2 B: APPLICATION....72
5.3 C: TUNING....77
5.4 D: REFERENCE SETTINGS....82
5.5 E: MOTOR PARAMETERS....86
5.6 H: TERMINAL FUNCTIONS....90
5.7 L: PROTECTION FUNCTIONS....102
5.8 N: SPECIAL ADJUSTMENTS....112
5.9 O: OPERATOR RELATED SETTINGS....113
5.10 U: MONITOR PARAMETERS....117

5.1 A: Initialization

The initialization group contains parameters associated with initial setup of the drive. Parameters involving the display language, access levels, initialization, and password are located in this group.

◆ A1: Initialization

■ A1-01: Parameter Access Level

Allows or restricts access to drive parameters.

No.	Parameter Name	Setting Range	Default
A1-01	Access Level Selection	0, 2	2

Setting 0: Operation Only

Access is restricted to parameters A1-01, A1-04, and all U monitor parameters.

Setting 2: Advanced Access Level (A) and Setup Access Level (S)

All parameters can be viewed and edited.

Notes on Parameter Access

- If the drive parameters are password protected by A1-04 and A1-05, parameters A1-01 and A1-03 cannot be modified.
- If parameters are changed via serial communication the parameters can not be changed from the digital operator until an Enter command is received from the serial communication.

■ A1-03: Initialization

Resets parameter settings back to their original default values. After the initialization the parameter automatically returns to 0.

No.	Parameter Name	Setting Range	Default
A1-03	Initialize Parameters	0, 2220, 3330	0

Setting 0: No Initialize

Setting 2220: 2-Wire Initialization

Resets all parameters back to their original default settings with digital inputs S1 and S2 configured as forward run and reverse run, respectively.

Setting 3330: 3-Wire Initialization

The drive parameters are returned to factory default values with digital inputs S1, S2, and S5 configured as run, stop, and forward/reverse respectively.

Notes on Parameter Initialization

The parameters shown in *Table 5.1* will not be reset when the drive is initialized by setting A1-03 = 2220 or 3330.

Table 5.1 Parameters not Changed by Drive Initialization

No.	Parameter Name
C6-01	Duty Selection
E1-03	V/f Pattern Selection
o2-04	Drive/kVA Selection
L8-35	Installation Selection

■ A1-04, A1-05: Password and Password Setting

A1-04 is for entering the password when the drive is locked. A1-05 is a hidden parameter used to set the password.

No.	Parameter Name	Setting Range	Default
A1-04	Password	0 to 9999	0
A1-05	Password Setting		

How to use the Password

The user can set a password for the drive to restrict access. The password is set to A1-05 and must be entered to A1-04 to unlock parameter access. Until the correct password is entered, the following parameters cannot be viewed or edited: A1-01 and A1-03.

The instructions below demonstrate how to set a new password. Here, the password set is “1234”. An explanation follows on how to enter the password to unlock the parameters.

Table 5.2 Setting the Password for Parameter Lock

Step			Display/Result
1.	Turn on the power to the drive. The initial display appears.	→	F 0.00 ALM REV DRV OUT
2.	Scroll to the Parameter Setup display and press ∧.	→	PAr
3.	Scroll to the right by pressing ENTER.	→	A1-01
4.	Select the flashing digits by pressing RESET.	→	A1-01
5.	Select A1-04 by pressing ∧.	→	A1-04
6.	Press the STOP key while holding down ∧ at the same time. A1-05 will appear. **Note:** A1-05 is normally hidden, but can be displayed by following the directions listed here.	→	A1-05 “05” flashes
7.	Press the ENTER key.	→	0000
8.	Use RESET, ∨ and ∧ to enter the password.	→	1234
9.	Press ENTER to save what was entered.	→	End
10.	The display automatically returns to the display shown in step 5.	→	A1-05

Table 5.3 Check to see if A1-01 is locked (continuing from step 10 above)

Step			Display/Result
1.	Press ∨ to display A1-01.	→	A1-01 “01” flashes
2.	Press ENTER to display the value set to A1-01.	→	0002
3.	Press ∨ and ∧, making sure that the setting values cannot be changed.		
4.	Press ESC to return to the first display.	→	PAr

Table 5.4 Enter the Password to Unlock Parameters (continuing from step 4 above)

Step			Display/Result
1.	Press ENTER to enter the parameter setup display.	→	A1-01
2.	Press RESET to select the flashing digits as shown.	→	A1-01 “01” flashes
3.	Press ∧ to scroll to A1-04.	→	A1-04
4.	Enter the password “1234”.	→	1234
5.	Press ENTER to save the new password.	→	End
6.	Drive returns to the parameter display.	→	A1-04
7.	Press ∨ and scroll to A1-01.	→	A1-01
8.	Press ENTER to display the value set to A1-01. If the first "0" blinks, parameter settings are unlocked.	→	0002
9.	Use RESET and ∧ to change the value if desired. This is not typical.		
10.	Press ENTER to save the setting, or ESC to return to the previous display without saving changes.	→	End
11.	The display automatically returns to the parameter display.	→	A1-01

Note: Parameter settings can be edited after entering the correct password. Performing a 2-Wire or 3-Wire initialization resets the password to “0000”. Reenter the password to parameter A1-05 after drive initialization.

5.2 b: Application

Application parameters configure the source of the frequency reference, the Run command, DC Injection Braking, and other application-related settings.

◆ b1: Mode of Operation

■ b1-01: Frequency Reference Selection

Use parameter b1-01 to select the frequency reference source for the REMOTE mode.

Note: **1.** If a Run command is input to the drive but the frequency reference entered is 0 or below the minimum frequency, the RUN indicator LED on the digital operator will light and the STOP indicator will flash.
2. Press the LO/RE key to set the drive to LOCAL and use the operator keypad to enter the frequency reference.

No.	Parameter Name	Setting Range	Default
b1-01	Frequency Reference Selection	0 to 3	1

Setting 0: Operator Keypad

Using this setting, the frequency reference can be input by:

- Switching between the multi-speed references in the d1-□□ parameters.
- Entering the frequency reference on the operator keypad.

Setting 1: Terminals (Analog Input Terminals)

Using this setting, an analog frequency reference can be entered from terminal A1 using a 0 to 10 Vdc or a 0/4 to 20 mA signal.

Note: The input signal type must be set up by setting DIP switch S1 and adjusting parameter H3-01. ***Refer to H3-01: Terminal A1 Signal Level Selection on page 98***.

Using a 0 to 10 Vdc Voltage Input Signal:

Use a circuit such as the one shown in ***Figure 5.1*** or an external 0 to 10 Vdc voltage source like a PLC analog output and set the input level selection for A1 in parameter H3-01 as desired. ***Refer to H3-01: Terminal A1 Signal Level Selection on page 98***.

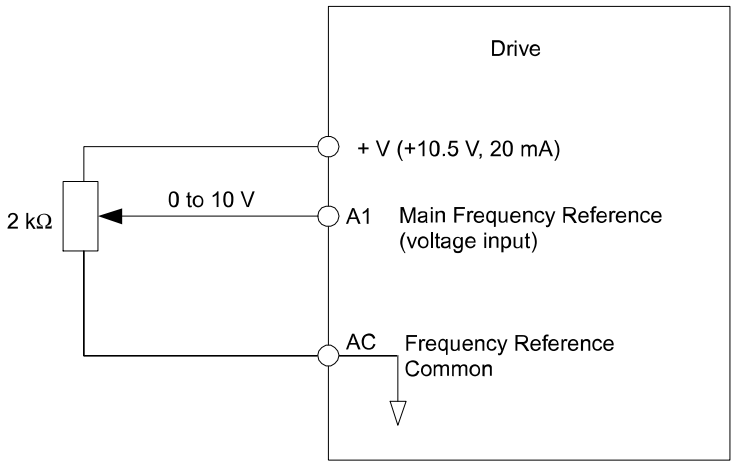

Figure 5.1 Setting the Frequency Reference by Voltage Input

Using a 0/4 to 20 mA Current Input Signal:

Connect input A1 to an external current source such as the one shown in ***Figure 5.2***. Make sure that switch S1 is set to "I" and set the appropriate signal level by entering 2 (4 to 20 mA) or 3 (0 to 20 mA) into parameter H3-01.

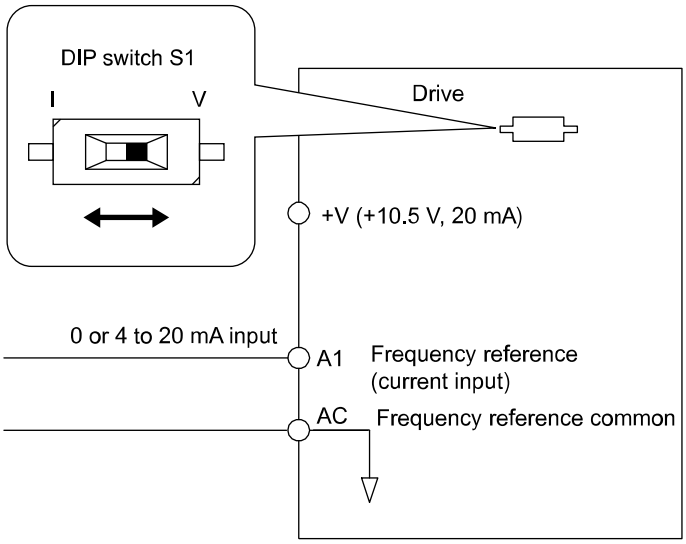

Figure 5.2 Setting the Frequency Reference by Current Input

Setting 2: MEMOBUS/Modbus Communications

Using this setting, the frequency reference can be entered via RS-422/485 serial communications using the MEMOBUS/Modbus protocol by using an optional SI-485/J Interface for MEMOBUS communication. ***Refer to Peripheral Devices & Options on page 149***. For details about the MEMOBUS/Modbus protocol, ***Refer to MEMOBUS/Modbus Communications on page 187***.

Note: If the frequency reference source is set for MEMOBUS/Modbus but a communication interface option is not installed, an oPE05 Programming Error will be displayed on the digital operator and the RUN command will not be accepted.

Setting 3: Potentiometer Option

Using this setting, the frequency reference can be set by a potentiometer mounted at the drive using an AI-V3/J Potentiometer option unit. ***Refer to Peripheral Devices & Options on page 149*** and the option unit documentation.

Note: If the frequency reference source is set for the potentiometer option (b1-01 = 3) but an option board is not installed, an oPE05 Programming Error will be displayed on the digital operator and the RUN command will not be accepted.

■ b1-02: Run Command Selection

Parameter b1-02 determines the Run and Stop command source in the REMOTE mode.

WARNING! *Sudden Movement Hazard. Clear personnel, secure equipment, and check sequence and safety circuitry before starting the drive. Failure to comply could result in death or serious injury from moving equipment.*

No.	Parameter Name	Setting Range	Default
b1-02	Run Command Selection	0 to 2	1

Setting 0: Operator

Using this setting, the RUN and STOP keys on the operator keypad will start and stop the motor. The LED in the LO/RE key will be on to indicate that the Run command is assigned to the operator. The example below shows how the drive can be operated if b1-02 is set to 0.

	Step		Display/Result
1.	Turn on the power to the drive. The initial display appears.	→	F 0.00 DRV
2.	Set the frequency reference to F6.00 (6 Hz).	→	F 6.00
3.	Press the RUN key to start the motor. The RUN indicator LED will light and the motor will begin rotating at 6 Hz.	→	RUN off → RUN on
4.	Press the STOP key to stop the motor. The RUN light will flash until the motor comes to a complete stop.	→	RUN flashing → RUN off

Setting 1: Control Circuit Terminal

This setting requires that the Run and Stop commands are entered from the digital input terminals. The following sequences can be used:

- 2-Wire sequence:
  Two inputs (FWD/Stop-REV/Stop). Initializing the drive by setting A1-01 = 2220, presets the terminals S1 and S2 to these functions. This is the default setting of the drive. ***Refer to Setting 40/41: Forward Run/Reverse Run Command for 2-Wire Sequence on page 94***.
- 3-Wire sequence:
  Inputs S1, S2, S5 (Start-Stop-FWD/REV). Initialize the drive by setting A1-01 = 3330 presets the terminals S1, S2 and S5 to these functions. ***Refer to Setting 0: 3-Wire Sequence on page 90***.

Setting 2: MEMOBUS/Modbus Communications

Using this setting, the Run command can be entered via RS-422/485 serial communications using the MEMOBUS/Modbus protocol and the optional SI-485/J Interface for MEMOBUS/Modbus communication. ***Refer to Peripheral Devices & Options on page 149***. For details about the MEMOBUS/Modbus protocol, ***Refer to MEMOBUS/Modbus Communications on page 187***.

■ b1-03: Stopping Method Selection

Select how the drive stops the motor when a Stop command is entered or when the Run command is removed.

No.	Parameter Name	Setting Range	Default
b1-03	Stopping Method Selection	0, 1	0

Setting 0: Ramp to Stop

When a Stop command is issued or the Run command is removed, the drive will decelerate the motor to stop. The deceleration rate is determined by the active deceleration time. The default deceleration time is set to parameter C1-02.

DC Injection braking can be applied at the end of the ramp in order to completely stop high inertia loads. ***Refer to b2: DC Injection Braking on page 76*** for details.

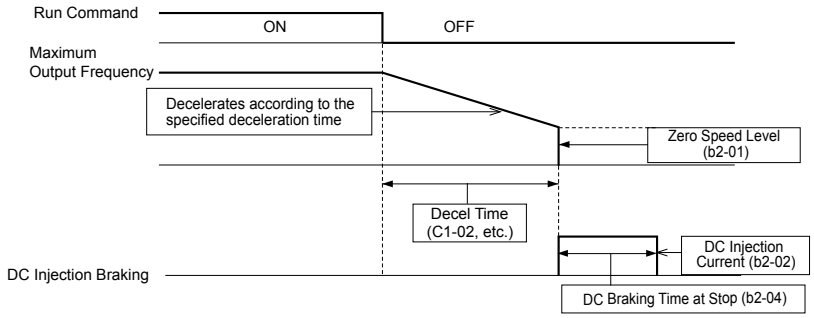

Figure 5.3 Ramp to Stop

Setting 1: Coast to Stop

When a Stop command is issued or the Run command is removed, the drive will shut off its output and the motor will coast (uncontrolled deceleration) to stop where the stopping time is determined by the inertia and the friction in the driven system.

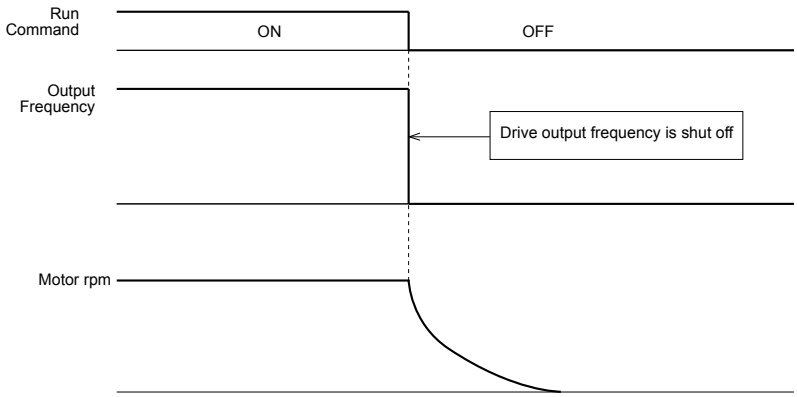

Figure 5.4 Coast to Stop

Note: After a stop is initiated, any subsequent Run command that is entered will be ignored for a certain time. Do not attempt to start the motor again until it has come to a complete stop. To start the motor before it has stopped completely, use DC Injection at start (***Refer to b2-03: DC Injection Braking Time at Start on page 76***).

■ b1-04: Reverse Operation Selection

For some applications, reverse motor rotation is not appropriate and may even cause problems (e.g., air handling units, pumps, etc.). Setting parameter b1-04 to 1 instructs the drive to ignore any Reverse run commands.

No.	Parameter Name	Setting Range	Default
b1-04	Reverse Operation Selection	0 or 1	0

Setting 0: Reverse Operation Enabled

Possible to operate the motor in both forward and reverse directions.

Setting 1: Reverse Operation Disabled

Drive disregards a Reverse run command or a negative frequency reference.

■ b1-07: LOCAL/REMOTE Run Selection

The drive has the following three separate control sources that can be switched using digital inputs or the LO/RE key on the digital operator (for details ***Refer to Setting 1: LOCAL/REMOTE Selection on page 91*** and ***Refer to Setting 2: Serial Communication Reference Selection on page 91***):

- LOCAL - The digital operator is used to set the reference and the Run command.
- REMOTE - The settings of b1-01 and b1-02 determine where the frequency reference and Run command are input from.
- Serial Communications by MEMOBUS/Modbus.

When switching from LOCAL to REMOTE, or to serial communication, the Run command may already be present at the location the source was switched to. Parameter b1-07 can be used to determine how the Run command is treated in this case.

No.	Parameter Name	Setting Range	Default
b1-07	LOCAL/REMOTE Run Selection	0 or 1	0

Setting 0: Run Command Must Be Cycled

If the Run command is issued differently in the old and new control source (e.g. old - terminals, new - serial communications) and it is active at the new source when switching takes place, the drive will either not start or it will stop if it was running before. The Run command has to be cycled to start from the new control source.

Setting 1: Continue Running

If the Run command is active at the new control source, the drive starts or continues running. There is no need to cycle the Run command.

WARNING! *The drive may start unexpectedly if switching control sources when b1-07 = 1. Clear all personnel away from rotating machinery and electrical connections prior to switching control sources. Failure to comply may cause death or serious injury.*

■ b1-08: Run Command Selection while in Programming Mode

As a safety precaution, the drive will not normally respond to a Run input when the digital operator is being used to adjust parameters in the Programming Mode (Verify Menu, Setup Mode, Parameter Settings Mode). If required by the application b1-08 can be used to changed this functionality.

No.	Parameter Name	Setting Range	Default
b1-08	Run Command Selection while in Programming Mode	0 to 2	0

Setting 0: Disabled

A Run command is not accepted while the digital operator is in Programming Mode.

Setting 1: Enabled

A Run command is accepted in any digital operator mode.

Setting 2: Prohibit Programming During Run

It is not possible to enter the Programming Mode as long as the drive output is active.

■ b1-14: Phase Order Selection

Sets the phase order for drive output terminals U/T1, V/T2, and W/T3.

No.	Parameter Name	Setting Range	Default
b1-14	Phase Order Selection	0 or 1	0

Setting 0: Standard Phase Order

Setting 1: Switched Phase Order

■ b1-17: Run Command at Power Up

This parameter is used to determine whether an external Run command that is active during power up of the drive will start the drive or not.

No.	Parameter Name	Setting Range	Default
b1-17	Run Command at Power Up	0 or 1	0

Setting 0: Run Command at Power Up is not Issued

The Run command has to be cycled to start the drive.

Note: For safety reasons, the drive is initially set up not to accept a Run command at power up (b1-17 = "0"). If a Run command is issued at power up, the RUN indicator LED will flash quickly. Change parameter b1-17 to 1 if a Run command active at power up shall be accepted by the drive.

Setting 1: Run Command and Power Up is Issued

An external Run command active during power up is issued and the drive starts to operate the motor as soon as it gets ready for operation (i.e. once the internal start up process is complete).

WARNING! *Sudden Movement Hazard. If b1-17 is set to 1 and an external Run command is active during power up, the motor will begin rotating as soon as the power is switched on. Proper precautions must be taken to ensure that the area around the motor is safe prior to powering up the drive. Failure to comply may cause serious injury.*

◆ b2: DC Injection Braking

These parameters determine how the DC Injection Braking feature operates. Parameters involving the starting frequency, current level, braking time are located here.

■ b2-02: DC Injection Braking Current

Sets the DC Injection Braking current as a percentage of the drive rated current. If set to larger than 50%, the carrier frequency is automatically reduced to 1 kHz.

No.	Name	Setting Range	Default
b2-02	DC Injection Braking Current	0 to 75%	50%

The level of DC Injection Braking current affects the strength of the magnetic field attempting to lock the motor shaft. Increasing the current level will increase the amount of heat generated by the motor windings. This parameter should only be increased to the level necessary to hold the motor shaft.

■ b2-03: DC Injection Braking Time at Start

Sets the time of DC Injection Braking at start. It can be used to stop a coasting motor before restarting it or to apply a braking torque at start. Disabled when set to 0.00 s.

No.	Name	Setting Range	Default
b2-03	DC Injection Braking Time at Start	0.00 to 10.00 s	0.50 s

Note: Before starting an uncontrolled rotating motor (e.g. a fan motor driven by windmill effect), use DC Injection to stop the motor before starting it. Otherwise motor stalling and other faults can occur.

■ b2-04: DC Injection Braking Time at Stop

When the output frequency falls below the minimum output frequency setting E1-09, the drive applies DC injection for the time set in b2-04. Used to completely stop a motor with high inertia load after ramp down. Increase the setting if the motor tends to coast by inertia after a stop.

No.	Name	Setting Range	Default
b2-04	DC Injection Braking Time at Stop	0.00 to 10.00 s	0.50 s

5.3 C: Tuning

C parameters are used to set the acceleration and deceleration characteristics, as well as S-curves. Other parameters in this group cover settings for slip compensation, torque compensation, and carrier frequency.

◆ C1: Acceleration and Deceleration Times

■ C1-01 to C1-04: Accel/Decel Times 1 and 2

Two sets of acceleration and deceleration times can be set in the drive. They can be selected by a digital input. Acceleration time parameters always set the time to accelerate from 0 to the maximum output frequency (E1-04). Deceleration time parameters always set the time to decelerate from maximum output frequency to 0. C1-01 and C1-02 are the default active accel/decel settings.

No.	Parameter Name	Setting Range	Default
C1-01	Acceleration Time 1	0.0 to 6000.0 s	10.0 s
C1-02	Deceleration Time 1		
C1-03	Acceleration Time 2		
C1-04	Deceleration Time 2		

Switching Acceleration Times by Digital Input

Accel/decel times 1 are active by default if no input is set. The accel/decel time 2 can be activated by a digital input (H1-□□= 7) as explained in *Table 5.5*.

Table 5.5 Accel/Decel Time Selection by Digital Input

Accel/Decel Time Sel. H1-□□ = 7	Active Times	
	Acceleration	Deceleration
0	C1-01	C1-02
1	C1-03	C1-04

Figure 5.5 shows an operation example for changing accel/decel. times. The example below requires that the stopping method be set for "Ramp to Stop" (b1-03 = 0).

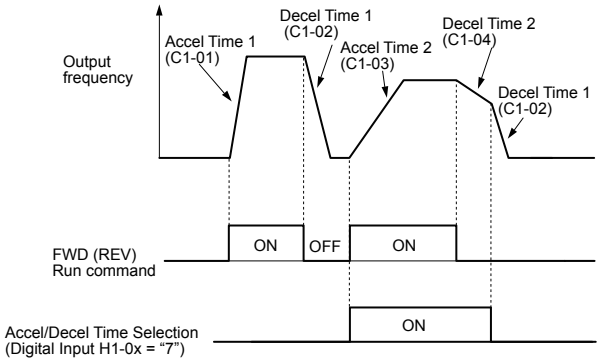

Figure 5.5 Timing Diagram of Accel/Decel Time Change

■ C1-09: Fast-stop Time

Parameter C1-09 will set a special deceleration that is used when certain faults occur or that can be operated by closing a digital input configured as H1-□□ = 15 (N.O. input) or H1-□□ = 17 (N.C. input). The input does not have to be closed continuously, even a momentary closure will trigger the Fast-stop operation.

Unlike standard deceleration, once the Fast-stop operation is initiated, the drive cannot be restarted until the deceleration is complete, the Fast-stop input is cleared, and the Run command is cycled.

A digital output programmed for "During Fast-stop" (H2-01/02/03 = 4C) will be closed as long as Fast-stop is active.

No.	Parameter Name	Setting Range	Default
C1-09	Fast-stop Time	0.0 to 6000.0 s	10.0 s

NOTICE: *Rapid deceleration can trigger an overvoltage fault. When faulted, the drive output shuts off, and the motor coasts. To avoid this uncontrolled motor state and to ensure that the motor stops quickly and safely, set an appropriate Fast-stop time to C1-09.*

◆ C2: S-Curve Characteristics

Use S-curve characteristics to smooth acceleration and deceleration and to minimize abrupt shock to the load.

■ C2-01 to C2-04: S-Curve Characteristics

C2-01 through C2-04 set separate S-curves for each section of the acceleration or deceleration.

No.	Parameter Name	Setting Range	Default
C2-01	S-Curve Characteristic at Accel Start	0.00 to 10.00 s	0.20 s
C2-02	S-Curve Characteristic at Accel End		0.20 s
C2-03	S-Curve Characteristic at Decel Start		0.20 s
C2-04	S-Curve Characteristic at Decel End		0.00 s

Figure 5.6 explains how S-curves are applied.

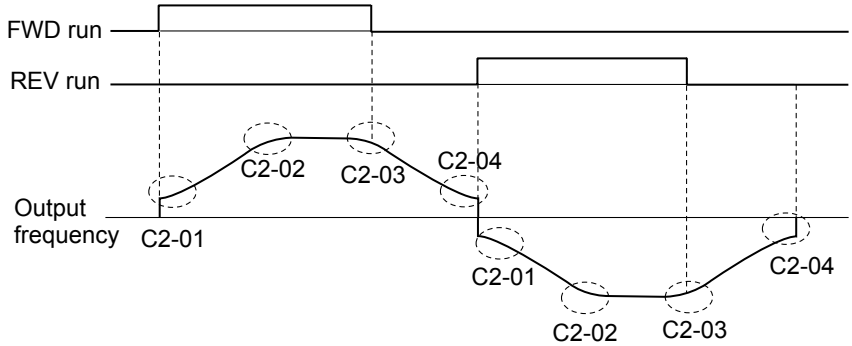

Figure 5.6 S-Curve Timing Diagram - FWD/REV Operation

Setting the S-curve will increase the acceleration and deceleration times.

Actual accel time = accel time setting + (C2-01 + C2-02)/2

Actual decel time = decel time setting + (C2-03 + C2-04)/2

◆ C3: Slip Compensation

The Slip Compensation function prevents motor speed loss due to an increase in load.

Note: Before making changes to the Slip Compensation parameters, make sure the motor parameters and V/f pattern are set properly.

■ C3-01: Slip Compensation Gain

This parameter sets the gain for the motor slip compensation function. Although this parameter rarely needs to be changed, adjustments might be needed under the following situations:

- If the speed at constant frequency reference is lower than the frequency reference, increase C3-01.
- If the speed at constant frequency reference is higher than the frequency reference, decrease C3-01.

No.	Parameter Name	Setting Range	Default
C3-01	Slip Compensation Gain	0.0 to 2.5	0.0

■ C3-02: Slip Compensation Primary Delay Time

Adjusts the filter on the output of the slip compensation function. Although this parameter rarely needs to be changed, adjustments might be needed under the following situations:

- Decrease the setting when the slip compensation response is too slow.
- Increase this setting when the speed is not stable.

No.	Parameter Name	Setting Range	Default
C3-02	Slip Compensation Primary Delay Time	0 to 10000 ms	2000 ms

◆ C4: Torque Compensation

The torque compensation function compensates for insufficient torque production at start-up or when a load is applied.

Note: Before making changes to the torque compensation gain make sure the motor parameters and V/f pattern are set properly.

■ C4-01: Torque Compensation Gain

Sets the gain for the torque compensation function.

No.	Parameter Name	Setting Range	Default
C4-01	Torque Compensation Gain	0.00 to 2.50	1.00

The drive calculates the motor primary voltage loss using the output current and the terminal resistance value (E2-05) and then adjusts the output voltage to compensate insufficient torque at start or when load is applied. The effect of this voltage compensation can be increased or decreased using parameter C4-01.

Adjustment

Although this parameter rarely needs to be adjusted, small changes in increments of 0.05 may help in the following situations:

- Increase this setting when using a long motor cable.
- Decrease this setting when motor oscillation occurs.

Adjust C4-01 so that the output current does not exceed the drive rated current.

◆ C6: Carrier Frequency

■ C6-01: Drive Duty Mode Selection

The drive has two different duty modes from which to select based on the load characteristics. The drive rated current, overload capacity, and carrier frequency will change depending upon the duty mode selection. Use parameter C6-01 (Duty Cycle) to select Heavy Duty (HD) or Normal Duty (ND) for the application. The default setting is ND. ***Refer to Specifications on page 163*** for details about the rated current.

No.	Parameter Name	Setting Range	Default
C6-01	Duty Mode Selection	0 or 1	0

Table 5.6 Differences between Heavy and Normal Duty

Mode	Heavy Duty Rating (HD)	Normal Duty Rating (ND)
C6-01	0	1
Characteristics	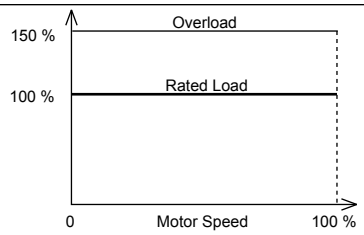	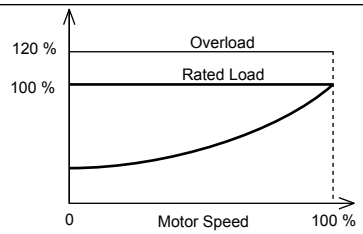
Application	Use Heavy Duty Rating for applications requiring a high overload tolerance with constant load torque. Such applications include extruders and conveyors.	Use Normal Duty Rating for applications in which the torque requirements drop along with the speed. Examples include fans or pumps where a high overload tolerance is not required.
Over load capability (oL2)	150% of drive rated Heavy Duty current for 60 s	120% of drive rated Normal Duty current for 60 s
L3-02 Stall Prevention during Acceleration	150%	120%
L3-06 Stall Prevention during Run	150%	120%
Default Carrier Frequency	8/10 kHz	2 kHz Swing PWM

Note: By changing the Duty Mode the drive maximum applicable motor power changes and the E2-□□parameters are automatically set to appropriate values.

■ C6-02: Carrier Frequency Selection

Parameter C6-02 sets the switching frequency of the drive's output transistors. It can be changed in order to reduce audible noise and also reduce leakage current.

Note: The drive rated current is reduced when the carrier frequency is set higher than the default value. ***Refer to Rated Current Depending on Carrier Frequency on page 80***.

No.	Parameter Name	Setting Range	Default
C6-02	Carrier Frequency Selection	1 to 7, F	Determined by o2-04. Reset when C6-01 is changed.

Settings:

C6-02	Carrier Frequency	C6-02	Carrier Frequency
1	2.0 kHz	5	12.5 kHz
2	5.0 kHz	6	15.0 kHz
3	8.0 kHz	7	Swing PWM
4	10.0 kHz	F	User defined (C6-03 to C6-05)

Note: Swing PWM uses 2.0 kHz carrier frequency as a base but by applying special PWM patterns the audible noise of the motor is kept low.

Guidelines for Carrier Frequency Parameter Setup

Symptom	Remedy
Speed and torque are unstable at low speeds.	Lower the carrier frequency.
Noise from the drive is affecting peripheral devices.	
Excessive leakage current from the drive.	
Wiring between the drive and motor is too long. <1>	
Audible motor noise is too loud.	Increase the carrier frequency or use Swing PWM. <2>

<1> The carrier frequency may need to be lowered if the motor cable is too long. Refer to the table below.
<2> In Normal Duty default setting is 7 (Swing PWM), equivalent to setting 2 kHz. Increasing the carrier frequency is fine when using the drive is set for Normal Duty, but remember that the drive rated current falls when the carrier frequency is increased.

Wiring Distance	Up to 50 m	Up to 100 m	Greater than 100 m
C6-02 (Carrier Frequency Selection)	1 to F (15 kHz)	1, 2 (5 kHz), 7	1 (2 kHz), 7

■ C6-03/C6-04/C6-05: Carrier Frequency Upper Limit/Lower Limit/Proportional Gain

Use these parameters to set a user defined or a variable carrier frequency. To set the upper and lower limits, first set C6-02 to “F”.

No.	Parameter Name	Setting Range	Default
C6-03	Carrier Frequency Upper Limit	1.0 to 15.0 kHz	<1>
C6-04	Carrier Frequency Lower Limit	1.0 to 15.0 kHz	
C6-05	Carrier Frequency Proportional Gain	0 to 99	

<1> The default value is determined by the drive capacity (o2-04), and is reinitialized when the value set to C6-01 is changed.

Setting a Fixed User Defined Carrier Frequency

A carrier frequency between the fixed selectable values can be entered in parameter C6-03 when C6-02 is set to “F”. Parameter C6-04 must also be adjusted to the same value as C6-03.

Setting a Variable Carrier Frequency

The carrier frequency can be set up to change linearly with the output frequency. In this case the upper and lower limits for the carrier frequency and the carrier frequency proportional gain (C6-03, C6-04, C6-05) have to be set as shown in *Figure 5.7*.

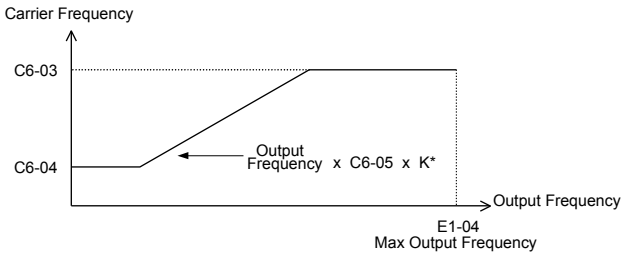

Figure 5.7 Carrier Frequency Changes Relative to Output Frequency

K is a coefficient determined by the value of C6-03:

- 10.0 kHz > C6-03 ≥ to 5.0 kHz: K = 2
- 5.0 kHz > C6-03: K = 1
- C6-03 ≥ 10.0 kHz: K = 3

Note: **1.** A carrier frequency error (oPE11) will occur when the carrier frequency proportional gain is greater than 6 while C6-03 is less than C6-04.
2. When C6-05 is set lower than 7, C6-04 is disabled and the carrier frequency will be fixed to the value set in C6-03.

■ Rated Current Depending on Carrier Frequency

The tables below show the drive output current depending on the carrier frequency settings. The 2 kHz value is equal to the Normal Duty rated current, the 8/10 kHz value is equal to the Heavy Duty rated current. The carrier frequency determines the output current linearly. Use the data below to calculate output current values for carrier frequencies not listed in the tables.

Note: In Heavy Duty mode the maximum rated output current is equal to the 8/10 kHz value, even if the carrier frequency is reduced.

Table 5.7 Drives with Heavy Duty Default Carrier Frequency of 10 kHz

200 V Single Phase Units				200 V Three Phase Units			
Model J□	Rated Current [A]			Model J□	Rated Current [A]		
	2 kHz	10 kHz	15 kHz		2 kHz	10 kHz	15 kHz
BA0001	1.2	0.8	0.6	BA0001	1.2	0.8	0.6
BA0002	1.9	1.6	1.3	BA0002	1.9	1.6	1.3
BA0003	3.5	3.0	2.4	BA0004	3.5	3.0	2.4

200 V Single Phase Units				200 V Three Phase Units			
Model J□	Rated Current [A]			Model J□	Rated Current [A]		
	2 kHz	10 kHz	15 kHz		2 kHz	10 kHz	15 kHz
BA0006	6.0	5.0	4.0	BA0006	6.0	5.0	4.0

Table 5.8 Drives with Heavy Duty Default Carrier Frequency of 8 kHz

200 V Single Phase Units				200 V Three Phase Units				400 V Three Phase Units			
Model J□	Rated Current [A]			Model J□	Rated Current [A]			Model J□	Rated Current [A]		
	2 kHz	8 kHz	15 kHz		2 kHz	8 kHz	15 kHz		2 kHz	8 kHz	15 kHz
BA0010	9.6	8.0	6.4	—	—	—	—	4A0001	1.2	1.2	0.7
—	—	—	—	2A0010	9.6	8.0	6.4	4A0002	2.1	1.8	1.1
—	—	—	—	2A0012	12.0	11.0	8.8	4A0004	4.1	3.4	2.0
—	—	—	—	—	—	—	—	4A0005	5.4	4.8	2.9
—	—	—	—	2A0020	19.6	17.5	14.0	4A0007	6.9	5.5	3.3
—	—	—	—	—	—	—	—	4A0009	8.8	7.2	4.3
—	—	—	—	—	—	—	—	4A0011	11.1	9.2	5.5

5.4 d: Reference Settings

The drive offers various ways of entering the frequency reference. The figure below gives an overview of the reference input, selections, and priorities.

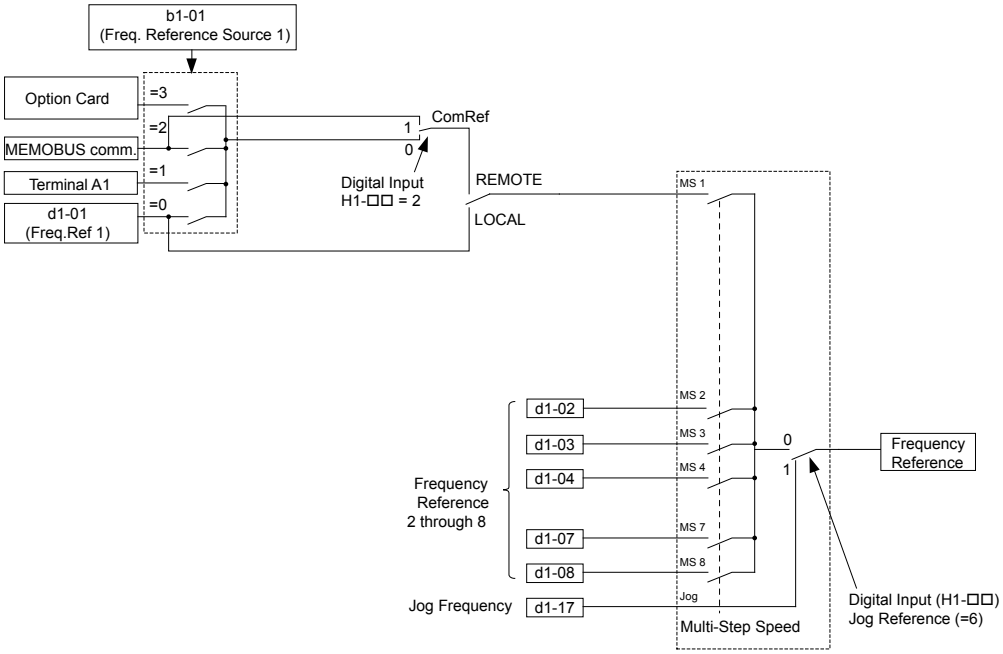

Figure 5.8 Frequency Reference Setting Hierarchy

◆ d1: Frequency Reference

■ d1-01 to d1-08, d1-17: Frequency Reference 1 to 8 and Jog Reference

Up to 9 preset references (including Jog reference) can be programmed in the drive. The references can be switched during Run by digital inputs. The acceleration/deceleration to the new reference is performed using the active acceleration/deceleration time.

The Jog frequency must be selected by a separate digital input and has priority over the references 1 to 8.

Multi-speed reference 1 can be provided by analog input A1.

No.	Parameter Name	Setting Range	Default
d1-01 to d1-08	Frequency Reference 1 to 8	0.00 to 400.00 Hz <1>	0.00 Hz
d1-17	Jog Frequency Reference	0.00 to 400.00 Hz <1>	6.00 Hz

<1> The upper limit is determined by the maximum output frequency (E1-04) and upper limit for the frequency reference (d2-01).

Multi-Step Speed Selection

Depending on how many speeds are used, some digital inputs have to be programmed for Multi-Step Speed Selection 1, 2, 3 and 4 (H1-□□ = 3, 4, 5). For the Jog reference a digital input must be set to H1-□□ = 6.

Notes on using analog inputs as multi-speed 1 and 2:

- If the frequency reference source is assigned to analog input A1 (b1-01 = 1), then this input will be used for Frequency Reference 1 instead of d1-01. If the reference source is assigned to the digital operator (b1-01 = 0), then d1-01 will be used as Frequency Reference 1.

The different speed references can be selected as shown in *Table 5.9*. *Figure 5.9* illustrates the multi-step speed selection.

Table 5.9 Multi-Step Speed Reference and Terminal Switch Combinations

Reference	Multi-Step Speed H1-□□ = 3	Multi-Step Speed 2 H1-□□ = 4	Multi-Step Speed 3 H1-□□ = 5	Jog Reference H1-□□ = 6
Frequency Reference 1 (d1-01/A1)	OFF	OFF	OFF	OFF
Frequency Reference 2 (d1-02)	ON	OFF	OFF	OFF
Frequency Reference 3 (d1-03)	OFF	ON	OFF	OFF
Frequency Reference 4 (d1-04)	ON	ON	OFF	OFF
Frequency Reference 5 (d1-05)	OFF	OFF	ON	OFF
Frequency Reference 6 (d1-06)	ON	OFF	ON	OFF
Frequency Reference 7 (d1-07)	OFF	ON	ON	OFF

Reference	Multi-Step Speed H1-□□ = 3	Multi-Step Speed 2 H1-□□ = 4	Multi-Step Speed 3 H1-□□ = 5	Jog Reference H1-□□ = 6
Frequency Reference 8 (d1-08)	ON	ON	ON	OFF
Jog Frequency Reference (d1-17) <1>	–	–	–	ON

<1> The Jog frequency overrides the frequency reference being used.

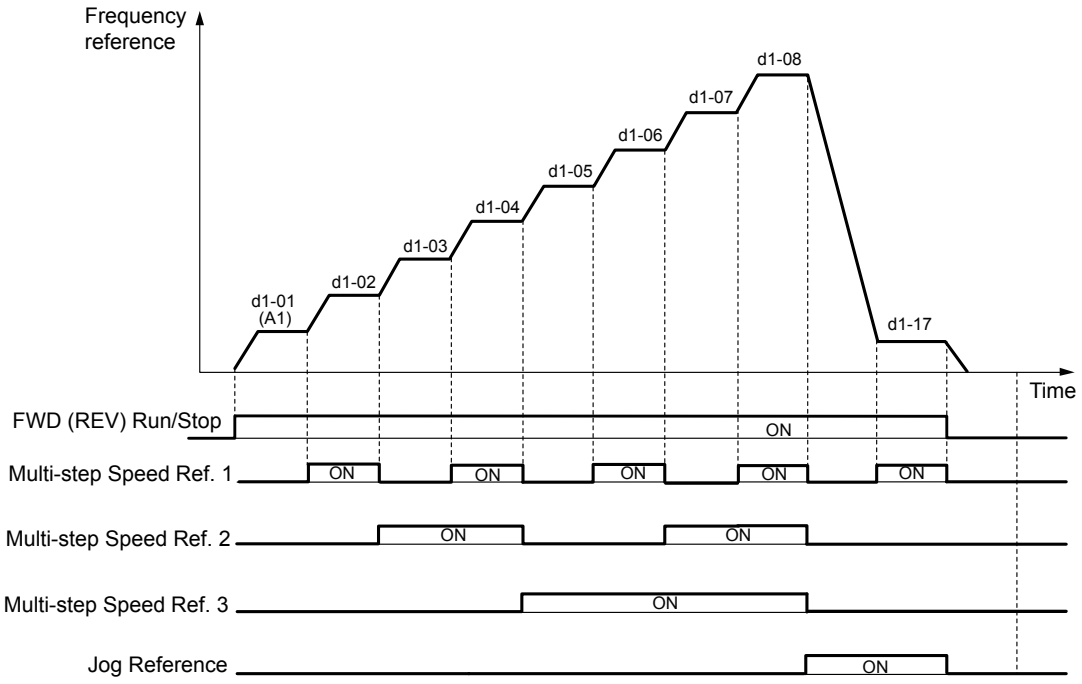

Figure 5.9 Preset Reference Timing Diagram

◆ d2: Frequency Upper/Lower Limits

By entering upper or lower frequency limits, the drive programmer can prevent operation of the drive above or below levels that may cause resonance and or equipment damage.

■ d2-01: Frequency Reference Upper Limit

Sets the maximum frequency reference as a percentage of the maximum output frequency. This limit applies to all frequency references.

Even if the frequency reference is set to a higher value, the drive internal frequency reference will not exceed this value.

No.	Parameter Name	Setting Range	Default
d2-01	Frequency Reference Upper Limit	0.0 to 110.0%	100.0%

■ d2-02: Frequency Reference Lower Limit

Sets the minimum frequency reference as a percentage of the maximum output frequency. This limit applies to all frequency references.

If a lower reference than this value is input, the drive will run at the d2-02 level. If the drive is started with a lower reference than d2-02, it will accelerate up to d2-02.

No.	Parameter Name	Setting Range	Default
d2-02	Frequency Reference Lower Limit	0.0 to 110.0%	0.0%

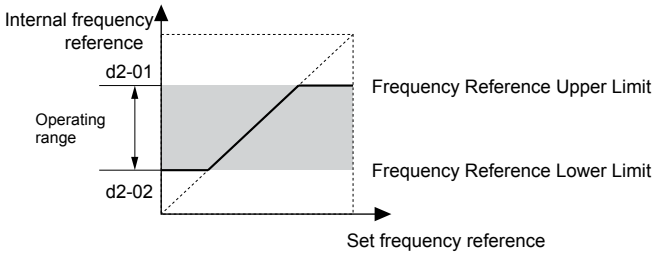

Figure 5.10 Frequency Reference: Upper and Lower Limits

◆ d3: Jump Frequency

■ d3-01, d3-02, d3-04: Jump Frequencies 1, 2, and Jump Frequency Width

In order to avoid continuous operation at a speed that causes resonance in driven machinery, the drive can be programmed with three separate Jump frequencies that will not allow continued operation within specific frequency ranges. If the speed reference falls within a Jump frequency dead band, the drive will clamp the frequency reference just below the dead band and only accelerate past it when the frequency reference rises above the upper end of the dead band.

Setting parameters d3-01 and d3-02 to 0.0 Hz disables the Jump frequency function.

No.	Parameter Name	Setting Range	Default
d3-01	Jump Frequency 1	0.0 to 400.0 Hz	0.0 Hz
d3-02	Jump Frequency 2	0.0 to 400.0 Hz	0.0 Hz
d3-04	Jump Frequency Width	0.0 to 20.0 Hz	1.0 Hz

Figure 5.11 shows the relationship between the Jump frequency and the output frequency.

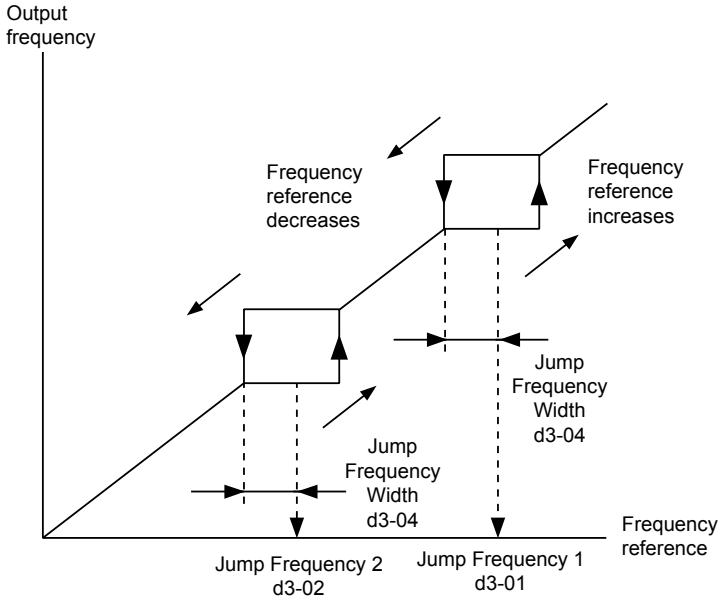

Figure 5.11 Jump Frequency Operation

Note: **1.** The drive will use the active accel/decel time to pass through the specified dead band range but will not allow continuous operation in that range.
2. When using more than one Jump frequency, make sure that d3-01 ≥ d3-02.

◆ d4: Frequency Hold Function

■ d4-01: Frequency Reference Hold Function Selection

This parameter is effective when either of the digital input functions listed below is used.

- Accel/decel ramp hold function (H1-□□= A)
- Up/Down function (H1-□□ = 10 and 11, sets the frequency reference by digital inputs)

Parameter d4-01 determines whether the frequency reference value is saved when the Run command is cleared or the power supply is shut down.

No.	Parameter Name	Setting Range	Default
d4-01	Frequency Reference Hold Function Selection	0 or 1	0

The operation depends on with what function parameter d4-01 is used.

Setting 0: Disabled

- Acceleration Hold
  The hold value will be reset to 0 Hz when the Run command is canceled or the drive power is switched off. The active frequency reference will be the value the drive uses when it restarts.
- Up/Down

The frequency reference value will be reset to 0 Hz when the Run command is canceled or the drive power is switched off. The drive will start from 0 Hz when restarted.

Setting 1: Enabled

- Acceleration Hold

  The last hold value will be saved when the Run command or the drive power is switched off. The drive will use the value that was saved as the frequency reference when it restarts. The accel/decel hold input must be enabled the entire time or else the hold value will be cleared.

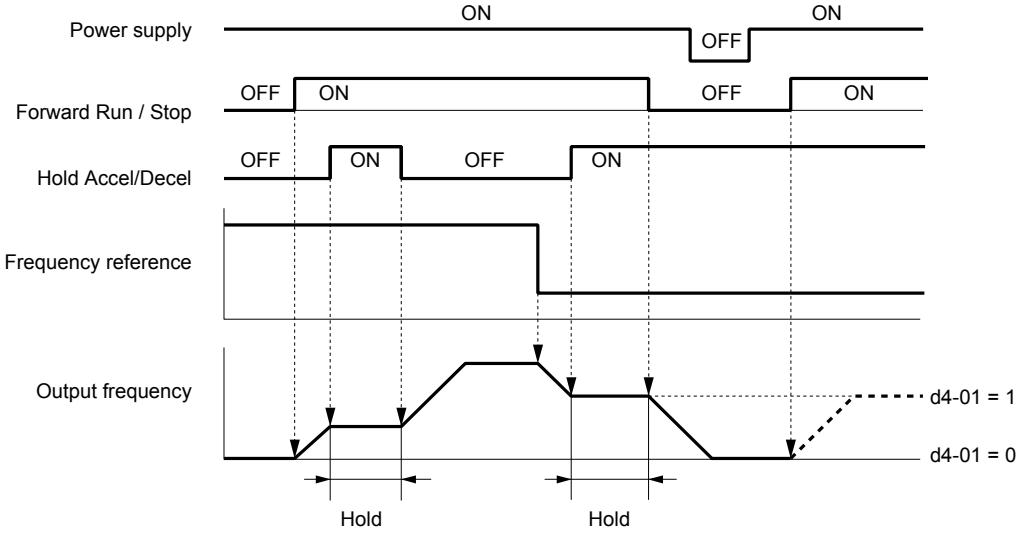

Figure 5.12 Frequency Reference Hold with Accel/Decel Hold Function

- Up/Down

  The frequency reference value will be saved when the Run command or the drive power is switched off. The drive will use the frequency reference that was saved when it restarts.

Clearing the Value that was Saved

Depending on which function is used, the frequency reference value that was saved can be cleared by:

- Releasing the acceleration hold input.
- Setting an Up or Down command while no Run command is active.

5.5 E: Motor Parameters

E parameters cover V/f pattern and motor data settings.

◆ E1: V/f Characteristics

■ E1-01: Input Voltage Setting

Set the input voltage parameter to the nominal voltage of the AC power supply. This parameter adjusts the levels of some protective features of the drive (overvoltage, Stall Prevention, etc.).

NOTICE: *Set parameter E1-01 to match the input voltage of the drive. Drive input voltage (not motor voltage) must be set in E1-01 for the protective features of the drive to function properly. Failure to comply could result in improper drive operation.*

No.	Parameter Name	Setting Range	Default
E1-01 <1>	Input Voltage Setting	155 to 255 V	200 V

<1> The setting range and default value shown here are for 200 V class drives. Double this for 400 V class units.

E1-01 Related Values

The input voltage setting determines the over-/undervoltage detection level and the operation levels of the braking transistor.

Voltage	Setting Value of E1-01	(Approximate Values)			
		ov Detection Level	BTR Operation Level	Uv Detection Level	Stall Prevention Level
200 V Class	all settings	410 V	394 V	190 V (single-phase = 160 V)	370 V
400 V Class	setting ≥ 400 V	820 V	788 V	380 V	740 V
	setting < 400 V	740 V	708 V	350 V	660 V

Note: The braking transistor operation levels are valid for the drive internal braking transistor. If an external CDBR braking chopper is used, refer to the instruction manual of that unit.

■ V/f Pattern Settings

The drive utilizes a set V/f pattern to determine the appropriate output voltage level for each relative to the frequency reference.

V/f Pattern Setup for V/f Control

1. Set the input voltage for the drive. Refer to E1-01: Input Voltage Setting on page *176*.
2. Set the V/f pattern. Refer to V/f Pattern Settings E1-04 to E1-10 on page *176*.

■ V/f Pattern Setting Examples

This section provides examples of how to set a V/f pattern using E1-04 to E1-10.

Table 5.10 V/f Pattern Examples

Example	Specification	Characteristic	Application
0	50 Hz (default setting)	Constant torque	For general purpose applications. Torque remains constant regardless of changes to speed.
1	60 Hz		
2	60 Hz (with 50 Hz base)		
3	72 Hz (with 60 Hz base)		
4	50 Hz, Heavy Duty 2	Derated torque	For fans, pumps, and other applications that require torque derating relative to the load.
5	50 Hz, Heavy Duty 1		
6	50 Hz, Heavy Duty 1		
7	50 Hz, Heavy Duty 2		
8	50 Hz, mid starting torque	High starting torque	Select high starting torque when: • Wiring between the drive an motor exceeds 150 m • A large amount of starting torque is required • An AC reactor is installed
9	50 Hz, high starting torque		
10	60 Hz, mid starting torque		
11	60 Hz, high starting torque		
12	90 Hz (with 60 Hz base)	Constant output	When operating at greater than 60 Hz the output voltage will be constant.
13	120 Hz (with 60 Hz base)		
14	180 Hz (with 60 Hz base)		

The following tables show details onV/f patterns.

The following graphs are for 200 V class drives. Double the values when using a 400 V class drive.

V/f Pattern Examples

Table 5.11 Constant Torque Characteristics, Examples 0 to 3

Example 0	50 Hz (default)	Example 1	60 Hz	Example 2	60 Hz	Example 3	72 Hz
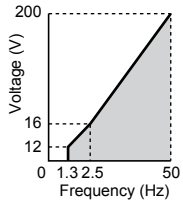		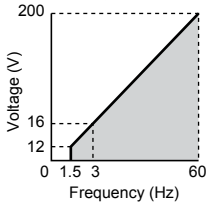		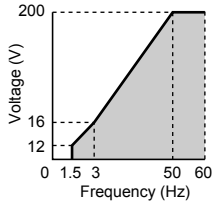		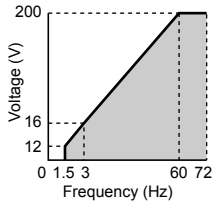	

Table 5.12 Derated Torque Characteristics, Examples 4 to 7

Example 4	50 Hz	Example 5	50 Hz	Example 6	60 Hz	Example 7	60 Hz
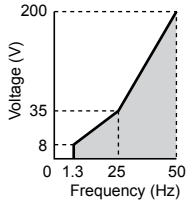		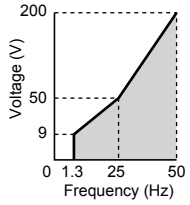		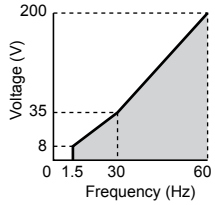		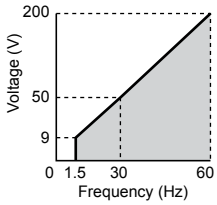	

Table 5.13 High Starting Torque, Examples 8 to 11

Example 8	50 Hz	Example 9	50 Hz	Example 10	60 Hz	Example 11	60 Hz
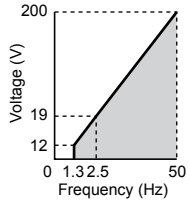		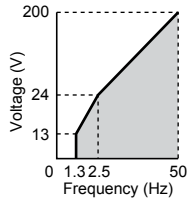		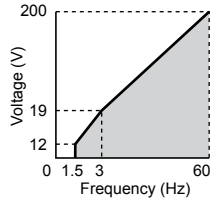		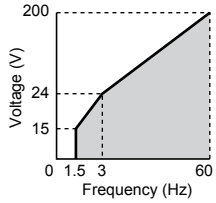	

Table 5.14 Rated Output Operation, Examples 12 to 14

Example 12	90 Hz	Example 13	120 Hz	Example 14	180 Hz
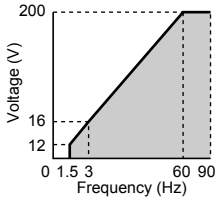		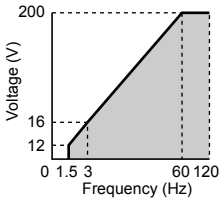		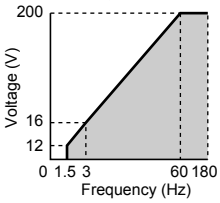	

■ V/f Pattern Settings E1-04 to E1-10

Set up the V/f pattern as shown in *Figure 4.6*.

No.	Parameter Name	Setting Range	Default
E1-04	Maximum Output Frequency	40.0 to 400.0 Hz	50 Hz
E1-05	Maximum Voltage	0.0 to 255.0 V <1>	200 V
E1-06	Base Frequency	0.0 to 400.0 Hz	50 Hz
E1-07	Middle Output Frequency	0.0 to 400.0 Hz	2.5 Hz
E1-08	Middle Output Frequency Voltage	0.0 to 255.0 V <1>	16.0 V
E1-09	Minimum Output Frequency	0.0 to 400.0 Hz	1.3 Hz
E1-10	Minimum Output Frequency Voltage	0.0 to 255.0 V <1>	12.0 V

<1> Values shown here are for 200 V class drives. Double values when using a 400 V class unit.

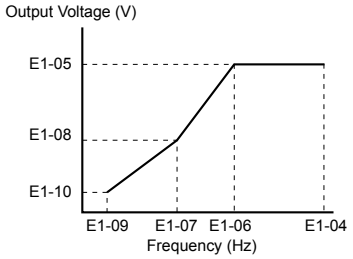

Figure 5.13 V/f Pattern

Note: **1.** The following condition must be true when setting up the V/f pattern: E1-09 ≤ E1-07 ≤ E1-06 ≤ E1-04
2. To make the V/f pattern a straight line set E1-09 = E1-07. In this case the E1-08 setting is disregarded.
3. E1-03 is unaffected when the drive is initialized using parameter A1-03, but the settings for E1-04 through E1-10 are returned to their default values.

◆ E2: Motor 1 Parameters

These parameters contain the most important motor data needed for optimal motor control.

■ E2-01: Motor Rated Current

Set E2-01 to the full load amps (FLA) stamped on the motor nameplate.

No.	Parameter Name	Setting Range	Default
E2-01	Motor Rated Current	10% to 200% of the drive rated current. (unit: 0.01 A)	Depending on o2-04

■ E2-02: Motor Rated Slip

Sets the motor rated slip in Hz.

No.	Parameter Name	Setting Range	Default
E2-02	Motor Rated Slip	0.00 to 20.00 Hz	Depending on o2-04

Calculate the motor rated slip using the information written on the motor nameplate and the formula below:

E2-02 = f - (n x p)/120

(f: rated frequency (Hz), n: rated motor speed (r/min), p: number of motor poles)

■ E2-03: Motor No-Load Current

Set E2-03 to the motor no-load current at rated voltage and rated frequency. Contact the motor manufacturer for information about the no-load current.

No.	Parameter Name	Setting Range	Default
E2-03	Motor No-Load Current	0 to [E2-01] (unit: 0.01 A)	Depending on o2-04

■ E2-05: Motor Line-to-Line Resistance

Sets the line-to-line resistance of the motor stator winding. Remember this value must be entered as line-line and not line-neutral.

No.	Parameter Name	Setting Range	Default
E2-05	Motor Line-to-Line Resistance	0.000 to 65.000 Ω	Depending on o2-04

Note: The setting range becomes 0.00 to 130.00 when using J□BA0002, J□2A0002, J□4A0001 and smaller.

Contact the motor manufacturer to find out the line-to-line resistance or measure it manually. When using the manufacturer Motor Test Report, calculate E2-05 by the formulas below.

- E-type insulation: Multiply 0.92 times the resistance value (Ω) listed on the Test Report at 75 °C
- B-type insulation: Multiply 0.92 times the resistance value (Ω) listed on the Test Report at 75 °C.
- F-type insulation: Multiply 0.87 times the resistance value (Ω) listed on the Test Report at 115 °C.

5.6 H: Terminal Functions

H parameters are used to assign functions to the external terminals.

◆ H1: Multi-Function Digital Inputs

■ H1-01 to H1-05: Functions for Terminals S1 to S5

These parameters assign functions to the multi-function digital inputs. The settings 0 to 67 determine function for each terminal and are explained below.

Note: If not using an input terminal or if using the through-mode, set that terminal to “F”.

No.	Parameter Name	Setting Range	Default
H1-01	Digital Input S1 Function Selection	1 to 9F	40: Forward Run Command (2-wire sequence)
H1-02	Digital Input S2 Function Selection	1 to 9F	41: Reverse Run Command (2-wire sequence)
H1-03	Digital Input S3 Function Selection	0 to 9F	24: External Fault
H1-04	Digital Input S4 Function Selection	0 to 9F	14: Fault Reset
H1-05	Digital Input S5 Function Selection	0 to 9F	3 (0) <1> : Multi-Step Speed Reference 1

<1> Number appearing in parenthesis is the default value after performing a 3-Wire initialization.

Table 5.15 Digital Multi-Function Input Settings

Setting	Function	Page	Setting	Function	Page
0	3-Wire Sequence	90	10	Up Command	92
1	LOCAL/REMOTE Selection	91	11	Down Command	
2	Serial Communication Reference Selection	91	14	Fault Reset	93
3	Multi-Step Speed Reference 1	91	15	Fast-Stop (N.O.)	93
4	Multi-Step Speed Reference 2		17	Fast-stop (N.C.)	93
5	Multi-Step Speed Reference 3		20 to 2F	External Fault	94
6	Jog Reference Selection	91	40	Forward Run/Stop (2-wire sequence)	94
7	Accel/Decel Time 1	91	41	Reverse Run/Stop (2-wire sequence)	
8	Baseblock Command (N.O.)	91	61	External Speed Search Command 1	94
9	Baseblock Command (N.C.)		62	External Speed Search Command 2	
A	Accel/Decel Ramp Hold	92	67	Communications Test Mode	95
F	Not used/Through Mode	92			

Setting 0: 3-Wire Sequence

When one of the digital inputs is programmed for 3-Wire control, that input becomes a forward/reverse directional input, S1 becomes the Run command input, and S2 becomes the Stop command input.

The drive will start the motor when the Run input S1 is closed for longer than 50 ms. The drive will stop the operation when the Stop input S2 is released for a brief moment. Whenever the input programmed for 3-Wire sequence is open, the drive will be set for forward direction. If the input is closed, the drive is set for reverse direction.

Note: When 3-Wire sequence is selected the Run and Stop command must be input at S1 and S2.

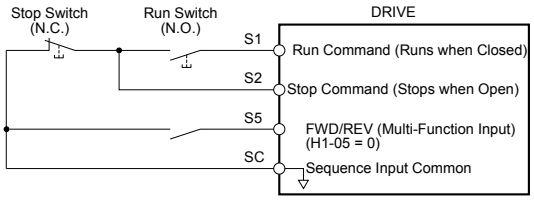

Figure 5.14 3-Wire Sequence Wiring Diagram

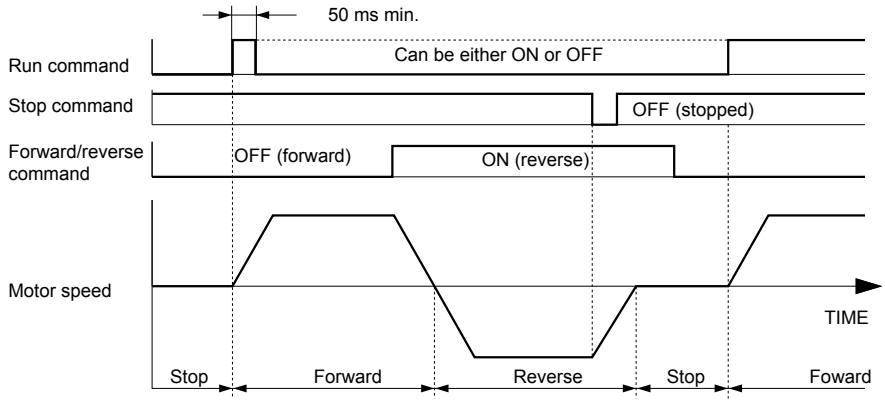

Figure 5.15 3-Wire Sequence

Note: **1.** The Run and Stop command must be open/closed for a short moment only to start and stop the drive.
2. If the Run command is active at power up and b1-17 = 0 (Run command at power up not accepted), the Run LED will flash to indicate that protective functions are operating. If required by the application, set b1-17 to "1" to have the Run command issued automatically as soon as the drive is powered up.

WARNING! *Sudden Movement Hazard. The drive may start unexpectedly in reverse direction after power up if it is wired for 3-Wire sequence but set up for 2-Wire sequence (default). When using 3-Wire sequence first set the drive properly (H1-□□ = 0) and then connect the control wires. Make sure b1-17 is set to "0" (drive does not accept Run command active at power up). When initializing the drive use 3-Wire initialization. Failure to comply could result in death or serious injury from moving equipment.*

Setting 1: LOCAL/REMOTE Selection

This setting allows the input terminal to determine if the drive will run in LOCAL mode or REMOTE mode.

Status	Description
Closed	LOCAL: Frequency reference and Run command are input from the digital operator.
Open	REMOTE: Frequency reference and Run command are input from the selected external reference. (b1–01/b1–02)

Note: **1.** If one of the multi-function input terminals is set to for LOCAL/REMOTE, then the LO/RE key on the operator will be disabled.
2. When the drive is set to LOCAL, the LO/RE LED will light.
3. The default setting of the drive is not to allow switching between LOCAL and REMOTE during run. to ***Refer to b1-07: LOCAL/REMOTE Run Selection on page 75*** if this feature is required by the application.

Setting 2: Serial Communication Reference Selection

This function can be used to switch the Run command and frequency reference source from the current selection (LOCAL or b1-01/02) to Serial Communication.

Status	Description
Open	LOCAL or the source defined by parameters b1-01/02
Closed	Run command and frequency reference are set by Serial Communications via MEMOBUS/Modbus

Note: The default setting of the drive is not to allow switching reference sources during run. ***Refer to b1-07: LOCAL/REMOTE Run Selection on page 75*** if this feature is required by the application.

Setting 3 to 5: Multi-Step Speed Reference 1 to 3

Used to switch Multi-Step Speed frequency references d1-01 to d1-08 by digital inputs. ***Refer to d1-01 to d1-08, d1-17: Frequency Reference 1 to 8 and Jog Reference on page 82*** for details.

Setting 6: Jog Frequency Reference Selection

Used to select the Jog frequency set in parameter d1-17 as active frequency reference. ***Refer to d1-01 to d1-08, d1-17: Frequency Reference 1 to 8 and Jog Reference on page 82*** for details.

Setting 7: Accel/Decel Time Selection 1

Used to switch between accel/decel times 1 and 2. ***Refer to C1-01 to C1-04: Accel/Decel Times 1 and 2 on page 77*** for details.

Setting 8/9: External Baseblock (N.O.) and External Baseblock (N.C.)

Setting 8 or 9 assign the Baseblock command to digital input terminals. When the drive receives a Baseblock command, the output transistor stop switching and the motor coasts to stop. During this time, the alarm "bb" will flash on the LED operator to indicate baseblock. For more information on alarms, ***Refer to Alarm Detection on page 131***. When baseblock ends and a Run command is active, the drive performs Speed Search to get the motor running again.

Operation	Inputs	
	Setting 8 (N.O.)	Setting 9 (N.C.)
Normal operation	Open	Closed

Operation	Inputs	
	Setting 8 (N.O.)	Setting 9 (N.C.)
Baseblock (Interrupt output)	Closed	Open

NOTICE: *If using baseblock in hoist applications, make sure the brake closes when the drive output is cut off by a Baseblock input. Failure to do so will result in the motor suddenly coasting when the Baseblock command is entered, causing the load to slip.*

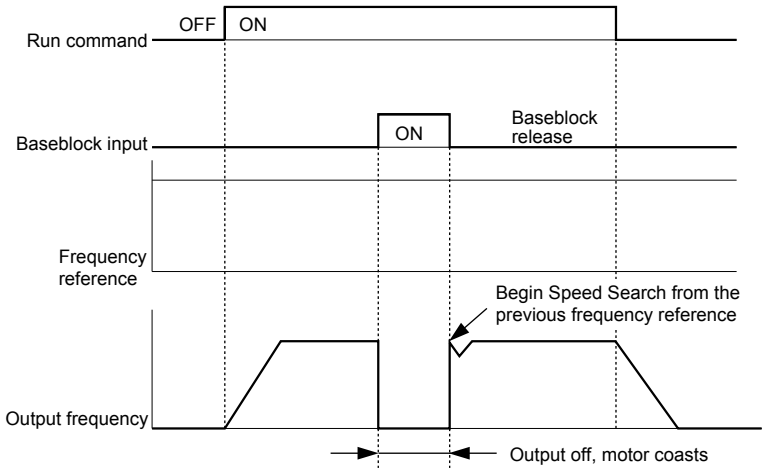

Figure 5.16 Baseblock Operation During Run

Setting A: Accel/Decel Ramp Hold

When the digital input programmed for the Accel/Decel Ramp Hold function closes, the drive will lock ("hold") the output frequency. All acceleration or deceleration will cease, and the drive will hold the current speed. Acceleration or deceleration will resume once the input is opened again.

If the Accel/Decel Ramp Hold function is enabled (d4-01 = 1), the drive will save the output frequency to memory whenever the Ramp Hold input is closed. When the drive is restarted after stop or after power supply interruption, the output frequency that was saved will become the frequency reference (provided that the Accel/Decel Ramp Hold input is still closed). ***Refer to d4-01: Frequency Reference Hold Function Selection on page 84*** for details.

Setting F: Not Used/Through Mode

Any digital input that is not used should be set to F. When set to “F”, an input does not trigger any function in the drive. Setting F, however, still allows the input status to be read out by a PLC via an optional MEMOBUS/Modbus communications interface. This way external sensors can be connected to unused drive digital inputs, thus reducing the need for separate PLC I/O units.

Setting 10/11: Up/Down Command

Using the Up/Down function allows the frequency reference to be set by two push buttons. One digital input must be programmed as the Up input (H1-□□= 10) to increase the frequency reference, the other one must be programmed as the Down input (H1-□□= 11) to decrease the frequency reference.

The Up/Down function has priority over the frequency references digital operator and analog inputs (b1-01 = 0, 1). If the Up/Down function is used, then references provided by these sources will be disregarded.

The inputs operate as shown in the table below.

Status		Description
Up (10)	Down (11)	
Open	Open	Hold current frequency reference
Closed	Open	Increase frequency reference
Open	Closed	Decrease frequency reference
Closed	Closed	Hold current frequency reference

Note:
1. An oPE03 alarm will occur when only one of the functions Up/Down is programmed for a digital input.
2. An oPE03 alarm will occur if the Up/Down function is assigned to the terminals while another input is programmed for the Accel/Decel Ramp Hold function. For more information on alarms, ***Refer to Drive Alarms, Faults, and Errors on page 123***.
3. The Up/Down function can only be used for external reference 1. Consider this when using Up/Down and the external reference switching function (H1-□□ = 2).

Using the Up/Down Function with Frequency Reference Hold (d4-01)

- When the frequency reference hold function is disabled (d4-01 = 0), the Up/Down frequency reference will be reset to 0 when the Run command is cleared or the power is cycled.
- When d4-01 = 1, the drive will save the frequency reference set by the Up/Down function. When the Run command or the power is cycled, the drive will restart with the reference value that was saved. The value that was saved can be reset by closing either the Up or Down input without having a Run command active. ***Refer to d4-01: Frequency Reference Hold Function Selection on page 84***.

Using the Up/Down Function with Frequency Reference Limits

The upper frequency reference limit is determined by parameter d2-01.

The value for the lower frequency reference limit can be set by an analog input or parameter d2-02. When a Run command is applied, the lower limits work as follows:

- If the lower limit is set by parameter d2-02 only, the drive will accelerate to this limit as soon as a Run command is entered.
- If the lower limit is determined by an analog input only, the drive will accelerate to the limit as long as the Run command and an Up or Down command are active. It will not start running if only the Run command is on.
- If the lower limit is set by both an analog input and d2-02, and the analog limit is higher than the d2-02 value, the drive will accelerate to the d2-02 value when a Run command is input. Once the d2-02 value is reached, it will continue acceleration to the analog limit only if an Up or Down command is set.

Figure 5.17 shows an Up/Down function example with a lower frequency reference limit set by d2-02 and the frequency reference hold function enabled/disabled.

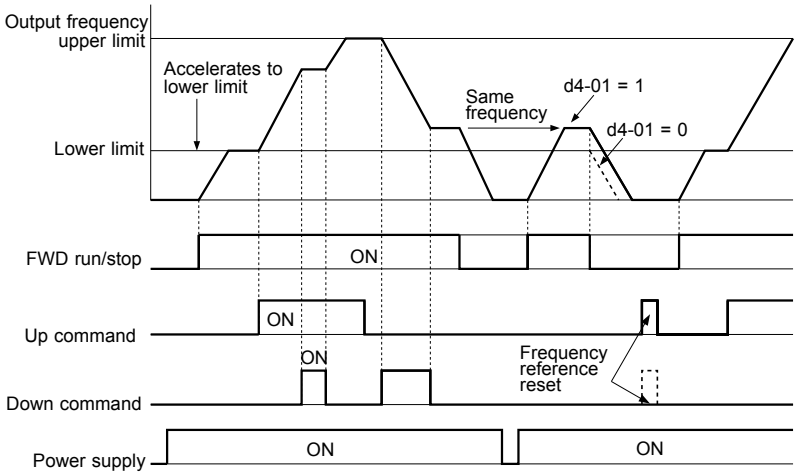

Figure 5.17 Up/Down Command Operation

Setting 14: Fault Reset

Whenever the drive detects a fault condition, the fault output contact will close and the drive's output will shut off. The motor then coasts to stop (specific stopping methods can be selected for some faults such as L1-04 for motor overheat). Once the Run command is removed, the fault can be cleared by either the RESET key on the digital operator or by closing a digital input configured as a Fault Reset (H1-□□ = 14).

Note: Fault Reset commands are ignored as long as the Run command is present. To reset a fault, first remove the Run command.

Setting 15/17: Fast-stop (N.O./N.C.)

The Fast-stop function operates much like an emergency stop input to the drive. If a Fast-stop command is input while the drive is running, the drive will decelerate to a stop by the deceleration time set to C1-09 (*Refer to C1-09: Fast-stop Time on page 77*). The drive can only be restarted after is has come to a complete stop, the Fast-stop input is off, and the Run command has been switched off.

- To trigger the Fast-stop function with a N.O. switch, set H1-□□ = 15
- To trigger the Fast-stop function with a N.C. switch, set H1-□□ = 17

Figure 5.18 shows an operation example of Fast-stop.

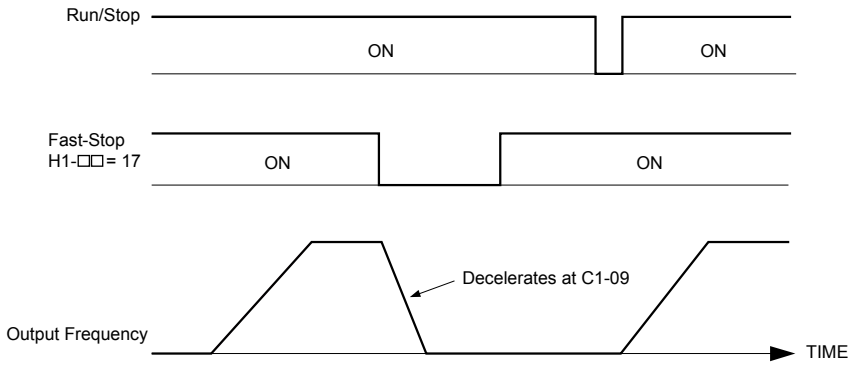

Figure 5.18 Fast-stop Sequence

NOTICE: *Rapid deceleration can trigger an overvoltage fault. When faulted, the drive output shuts off, and the motor coasts. To avoid this uncontrolled motor state and to ensure that the motor stops quickly and safely, set an appropriate Fast-stop time to C1-09.*

Setting 20 to 2F: External Fault

By using the External Fault function, the drive can be stopped when problems occur with external devices.

To use the external fault function, set one of the multi-function digital inputs to any value between 20 to 2F. The operator will display EF□ where □ is the number of the terminal (terminal S□) to which the external fault signal is assigned.

For example, if an external fault signal is input to terminal S3, “EF3” will be displayed.

Select the value to be set in H1-□□ from a combination of any of the following three conditions:

- Signal input level from peripheral devices (N.O./N.C.)
- External fault detection method
- Operation after external fault detection

The following table shows the relationship between the conditions and the value set to H1-□□:

Setting	Terminal Status <1>		Detection Method <2>		Stopping Method			
	N.O.	N.C.	Always Detected	Detected during Run only	Ramp to Stop (fault)	Coast to Stop (fault)	Fast-stop (fault)	Alarm Only (continue running)
20	O		O		O			
21		O	O		O			
22	O			O	O			
23		O		O	O			
24	O		O			O		
25		O	O			O		
26	O			O		O		
27		O		O		O		
28	O		O				O	
29		O	O				O	
2A	O			O			O	
2B		O		O			O	
2C	O		O					O
2D		O	O					O
2E	O			O				O
2F		O		O				O

<1> Determine the terminal status for each fault, i.e., whether the terminal is normally open or normally closed.
<2> Determine whether detection for each fault should be enabled only during run or always detected.

Setting 40/41: Forward Run/Reverse Run Command for 2-Wire Sequence

Sets the drive for 2-Wire sequence.

When the input set to 40 is closed, the drive operates in the forward direction. When the input set for 41 is closed, the drive will operate in reverse. Closing both inputs at the same time will result in an external fault.

Note: These functions are assigned to the terminals S1 and S2 when the drive is initialized for 2-Wire sequence.

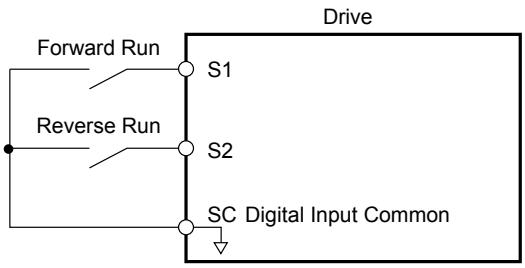

Figure 5.19 Example Wiring Diagram for 2-Wire Sequence

Setting 61/62: Speed Search 1/2

These input functions can be used to enable Speed Search. When the Speed Search 1 input (H1-□□ = 61) is enabled the drive will search the motor speed starting from the maximum output frequency. With Speed Search 2 input (H1-□□ = 62) enabled the Speed Search will be performed starting from the frequency reference.

Note: Operator error oPE03 will result if both Speed Search 1 and Speed Search 2 are set to the input terminals at the same time.

Setting 67: Communication Test Mode

If a RS-422/485 communications options is attached to the drive, this function can be used to perform a self-diagnosis of the communication interface. The drive transmits data and then confirms the communications are received normally. *Refer to Self-Diagnostics on page 209* for details on how to use this function.

◆ H2: Multi-Function Output

■ H2-01: Terminal MA/MB/MC Function Selection

The drive has a multi-function output terminal. Set parameter H2-01 between 0 and 13D to assign functions to this terminal. Default values are listed in the following table.

No.	Parameter Name	Setting Range	Default
H2-01	Terminal MA, MB and MC Function Selection (relay)	0 to 13D	E: Fault

Note: If not using an input terminal or if using it in the through-mode, be sure to set that terminal to "F".

Table 5.16 Multi-Function Output Terminal Settings

Setting	Function	Page	Setting	Function	Page
0	During Run	95	E	Fault	97
1	Zero Speed	95	F	Not used/Through Mode	97
2	Speed Agree	96	10	Alarm	97
4	Frequency Detection 1	96	17	Torque Detection 1 (N.C.)	97
5	Frequency Detection 2	96	1A	During Reverse Operation	98
6	Drive Ready	97	1E	Restart Enabled	98
7	DC Bus Undervoltage	97	3C	LOCAL/REMOTE Status	98
8	During Baseblock (N.O.)	97	3D	During Speed Search	98
B	Torque Detection 1 (N.O.)	97	100 to 13D	H2 Parameter Functions Reversed Output Switching of 0 to 92	98

Setting 0: During Run

Output closes when the drive is outputting a voltage.

Status	Description
Open	Drive is stopped.
Closed	A Run command is input or the drive is during deceleration or during DC injection.

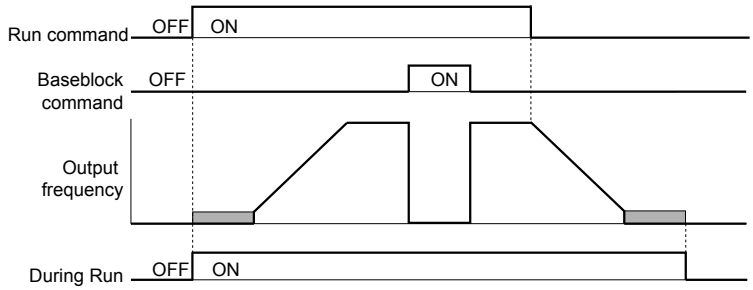

Figure 5.20 During Run Time Chart

Setting 1: Zero Speed

Terminal closes whenever the output frequency falls below the minimum output frequency set to E1-09.

Status	Description
Open	Output frequency is above the minimum output frequency set to E1-09
Closed	Output frequency is less than the minimum output frequency set to E1-09

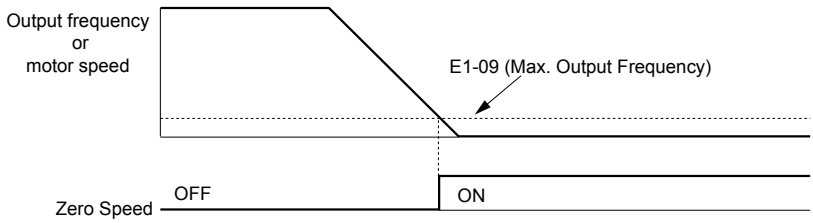

Figure 5.21 Zero-Speed Time Chart

Setting 2: Speed Agree (f_{ref}/f_{out} Agree)

Closes whenever the actual output frequency is within the current frequency reference regardless of the direction, plus or minus 2 Hz.

Status	Description
Open	Output frequency does not match the frequency reference while the drive is running.
Closed	Output frequency is within the range of frequency reference ± 2 Hz.

Note: Detection works in both directions, forward and reverse.

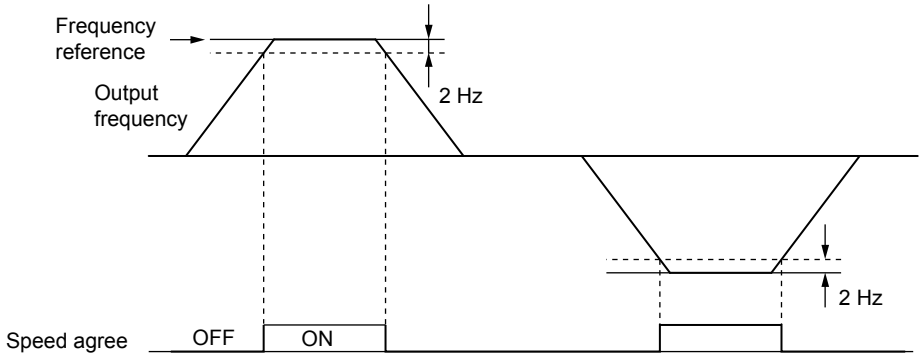

Figure 5.22 Speed Agree Time Chart

Refer to L4-01: Speed Agreement Detection Level on page 106 for details on setting the detection width.

Setting 4: Frequency Detection 1

Output is closed as long as the output frequency is below the detection level set in L4-01 plus 2 Hz. It closes when the output frequency falls below L4-01.

Status	Description
Open	Output frequency exceeded L4-01 + 2 Hz.
Closed	Output frequency is below L4-01 or has not exceeded L4-01 + 2 Hz.

Note: The detection works in both forward and reverse. The value of L4-01 will be used as the detection level for both directions.

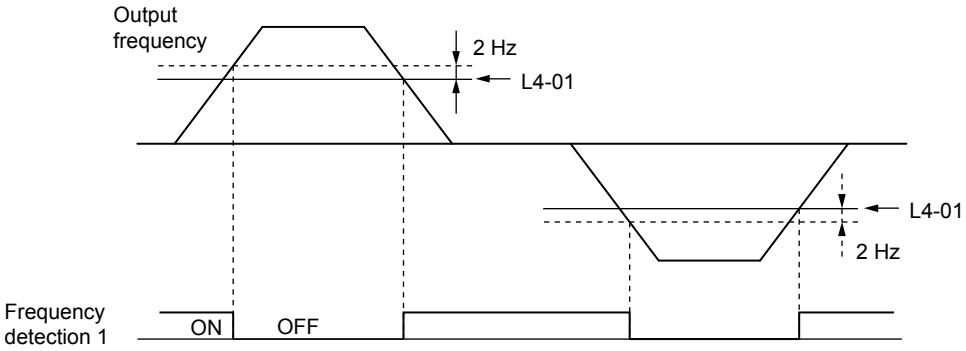

Figure 5.23 Frequency Detection 1 Time Chart

Refer to L4-01: Speed Agreement Detection Level on page 106 for details on setting the detection width.

Setting 5: Frequency Detection 2

Output closes whenever the output frequency is equal to or above the detection level set in L4-01. The output opens when the output frequency falls below L4-01 minus 2 Hz.

Status	Description
Open	Output frequency is below L4-01 minus 2 Hz or has not exceeded L4-01.
Closed	Output frequency exceeded L4-01.

Note: The detection works in both forward and reverse. The value of L4-01 will be used as the detection level for both directions.

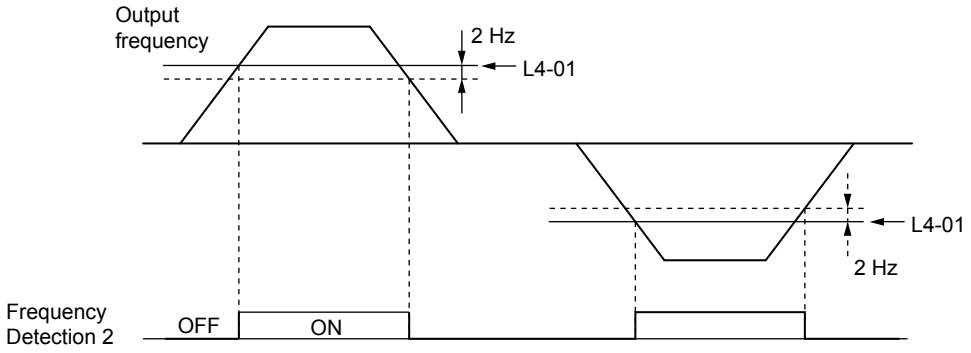

Figure 5.24 Frequency Detection 2 Time Chart

Refer to L4-01: Speed Agreement Detection Level on page 106 for details on setting the detection width.

Setting 6: Drive Ready

Output closes whenever the drive is ready to operate the motor.

Status	Description
Open	During power up, initialization, fault or in Programming Mode (while b1-08 = 0 or 2).
Closed	Drive is ready for operation.

Refer to b1-08: Run Command Selection while in Programming Mode on page 75 for details on the setting of b1-08.

Setting 7: DC Bus Undervoltage

Output closes whenever the DC bus voltage or control circuit power supply drops below the trip level. The undervoltage trip level depends on the setting of parameter E1-01. Refer to E1-01 for details. A fault in the DC bus charge circuit will also cause the DC Bus Undervoltage output to close.

Status	Description
Open	DC bus voltage is above the undervoltage level.
Closed	DC bus voltage has fallen below the undervoltage level.

Setting 8: During Baseblock (N.O.)

Output closes to indicate that the drive is in a baseblock state. While Baseblock is executed, output transistors are not switched and no voltage will be output.

Status	Description
Open	Drive is not in a baseblock state.
Closed	Baseblock is being executed.

Settings B and 17: Torque Detection (N.O./N.C.)

These digital output functions can be used to signal an overtorque situation to an external device.

Set up the torque detection and select the output function from the table below. *Refer to L6: Torque Detection on page 108* for details.

Setting	Status	Description
B	Closed	Torque Detection (N.O.): Output current/torque exceeds the torque value set in parameter L6-02 for longer than the time specified in parameter L6-03.
17	Open	Torque Detection (N.C.): Output current/torque exceeds the torque value set in parameter L6-02 for longer than the time specified in parameter L6-03.

Setting E: Fault

The Fault configured digital output will close whenever the drive experiences a fault (this excludes faults CPF00 and CPF01).

Setting F: Not Used

Use this setting when the terminal is not used or when using the terminal as a throughput.

When set to “F”, the output is not set by any drive function but it can be switched by a PLC via MEMOBUS/Modbus communications interface (through mode).

Setting 10: Minor Fault

Output closes when a minor fault condition is present.

Setting 1A: During Reverse

The During Reverse digital output will close whenever the drive is turning the motor in the reverse direction.

Status	Description
Open	Motor is driven in the forward direction or stopped.
Closed	Motor is driven in reverse.

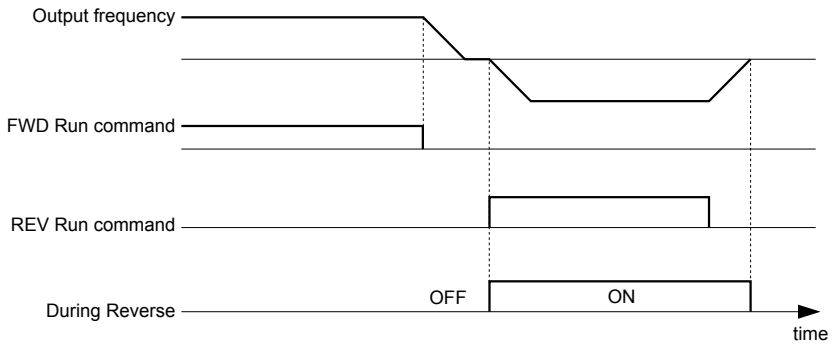

Figure 5.25 Reverse Direction Output Example Time Chart

Setting 1E: Restart Enabled

The Restart Enabled output will be closed once the fault restart function becomes active and will remain closed until a successful restart is accomplished or the number of Auto Restart attempts as specified by L5-01 is reached. ***Refer to L5: Fault Restart on page 107*** for details on automatic fault restart.

Setting 3C: LOCAL/REMOTE Status

Output terminal closes while the drive is set for LOCAL and opens when in REMOTE.

Status	Description
Open	REMOTE: The selected external reference (b1-01/02 or MEMOBUS/Modbus) is used as frequency reference and Run command source
Closed	LOCAL: The digital operator is used as frequency reference and Run command source

Setting 3D: During Speed Search

Output terminal closes while Speed Search is being performed.

Setting 100 to 13D: Reverse Switching for Functions 0 to 3D

These settings reverse the switching status of the specified function. Set as 1□□, where the last two digits specify the setting number of the function to be reversed.

Examples:

- To reverse the output for “8: During Baseblock”, set “108”.
- To reverse the output for “3C: Run command” set “13C”.

◆ H3: Analog Input Terminal A1 Settings

These parameters adjust the signal level and characteristics of the analog frequency reference input A1.

■ H3-01: Terminal A1 Signal Level Selection

Selects the input signal level for analog input A1.

No.	Name	Setting Range	Default
H3-01	Terminal A1 Signal Level Selection	0 to 3	0

Setting 0: 0 to 10 Vdc with Limit

The input level is 0 to 10 Vdc. Negative input values will be limited to 0.

Example: Terminal A1 is set to supply the frequency reference, and the bias (H3-04) is set to -100%. The frequency reference can be set from 0 to 100% with an analog input of 5 to 10 V. The frequency reference will be zero when the analog input is between 0 and 5 V.

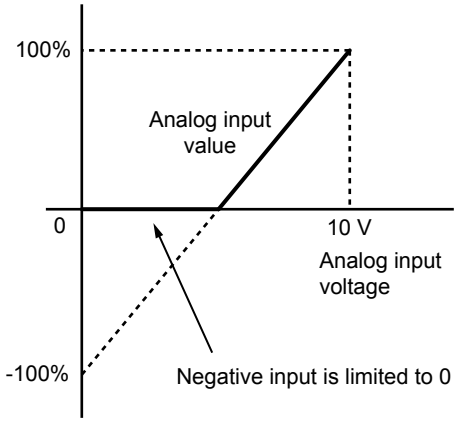

Figure 5.26 Analog Input with Limit (Bias Setting -100%)

Setting 1: 0 to 10 Vdc without Limit

The input level is 0 to 10 Vdc. Negative input values will be accepted.

Example: Terminal A1 is set to supply the frequency reference, and the bias (H3-04) is set to -100%. The frequency reference can be set from 0 to 100% with an analog input of 5 to 10 V. With an input of 0 to 5 V, the frequency reference can be set from -100% to 0%. The drive reverses the motor rotation with negative input.

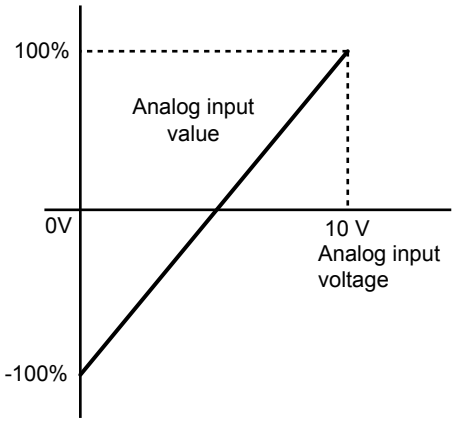

Figure 5.27 Analog Input without Limit (Bias Setting -100%)

Setting 2: 4 to 20 mA Current Input

The input level is 4 to 20 mA. Negative input values by negative bias or gain settings will be limited to 0 (like setting 0).

Setting 3: 0 to 20 mA Current Input

The input level is 0 to 20 mA. Negative input values by negative bias or gain settings will be limited to 0 (like setting 0).

■ H3-03/H3-04: Terminal A1 Gain/Bias Setting

Parameter H3-03 sets the level of the selected input value that is equal to 10 Vdc input at terminal A1 (Gain).

Parameter H3-04 sets the level of the selected input value that is equal to 0 V input at terminal A1.

Both can be used to adjust the analog input A1 characteristics.

No.	Name	Setting Range	Default
H3-03	Terminal A1 Gain Setting	-999.9 to 999.9%	100.0%
H3-04	Terminal A1 Bias Setting	-999.9 to 999.9%	0.0%

Default Settings

Using the factory default settings for the analog input's function, gain, and bias, the 0 to 10 Vdc signal at the analog input will yield a 0 to 100% frequency reference span.

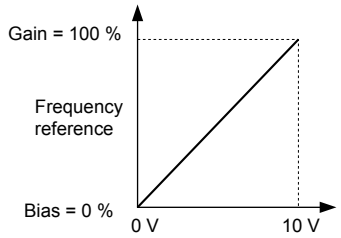

Figure 5.28 Analog Input A1 Default Characteristics

Setting Examples

- Gain H3-03 = 200%, A1 as frequency reference input:
  An input 10 Vdc will be equivalent to a 200% frequency reference and 5 Vdc will be equivalent to a 100% frequency reference. Since the drive output is limited by the maximum frequency parameter (E1-04), the frequency reference will be equal to E1-04 above 5 Vdc.

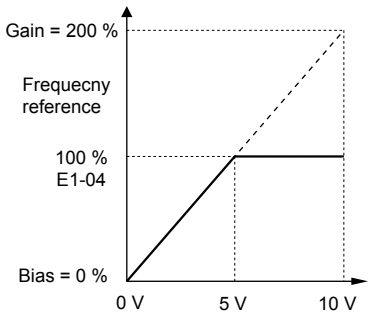

Figure 5.29 Frequency Reference Setting by Analog Input with Increased Gain

- Bias H3-04 = -25%, A1 as frequency reference input
  An input of 0 Vdc will be equivalent to a -25% frequency reference.
  When parameter H3-01 = 0 the minimum frequency reference is 0% between 0 and 2.5 Vdc input. An analog input of 2.5 to 10 Vdc will now be the same as 0 to 100% of the frequency reference span.
  When parameter H3-01 = 1, the motor will rotate in reverse between 0 and 2.5 Vdc input.

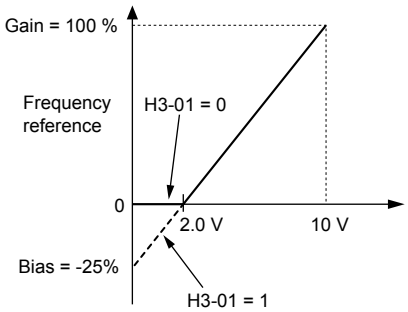

Figure 5.30 Frequency Reference Setting by Analog Input with Negative Bias

- Gain = 0%, Bias = 100%, A1 as frequency reference input
  This setting leads to an inverse-acting frequency reference. The minimum analog input level (0 Vdc) will produce a 100% frequency reference and the maximum analog input level (10 Vdc) will produce a 0% frequency reference.

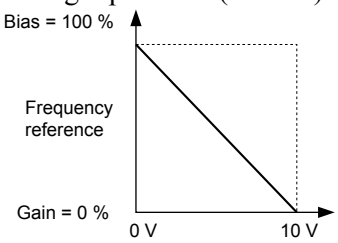

Figure 5.31 Frequency Reference Setting by Analog Input with Inverse Gain and Bias Settings

■ H3-13: Analog Input Filter Time Constant

Parameter H3-13 sets the time constant for a first order filter that will be applied to analog input A1 and also to the reference value from potentiometer option (AI-V3/J).

No.	Name	Setting Range	Default
H3-13	Analog Input Filter Time Constant	0.00 to 2.00 s	0.03 s

An analog input filter can be used to prevent erratic drive control when a “noisy” analog reference is used. The drive operation becomes more stable the longer the time programmed, but it becomes less responsive to rapidly changing analog signals.

◆ H4: Multi-Function Analog Output Terminal AM

These parameters assign a function to analog output terminal AM for monitoring a specific aspect of drive performance.

■ H4-01: Multi-Function Analog Terminal AM Monitor Selection

Sets the desired drive monitor parameter U□-□□ to output as an analog value via terminal AM. ***Refer to U: Monitors on page 183*** for a list of all monitors. The “Analog Output Level” columns indicates if a monitor can be applied for analog output.

Example: Enter “103” for U1-03.

No.	Name	Setting Range	Default
H4-01	Multi-Function Analog Terminal AM Monitor Selection	000 to 999	102

A setting of 031 or 000 applies no drive monitor to the analog output. With this setting the terminal AM output level can be set by a PLC via a MEMOBUS/Modbus communications interface (through mode).

■ H4-02/H4-03: Multi-Function Analog Output Terminal AM Gain/Bias

Parameter H4-02 sets the output voltage that is equal to 100% of the monitor value. Parameter H4-03 sets the output voltage equal to 0% of the monitor value.

Both values are set as a percentage of 10 V. The minimum output voltage for terminal AM is 0 V, the maximum is 10 Vdc. ***Figure 5.32*** illustrates the function of the gain and bias settings.

No.	Name	Setting Range	Default
H4-02	Multi-Function Analog Output Terminal AM Gain	-999.9 to 999.9%	100.0%
H4-03	Multi-Function Analog Output Terminal AM Bias	-999.9 to 999.9%	0.0%

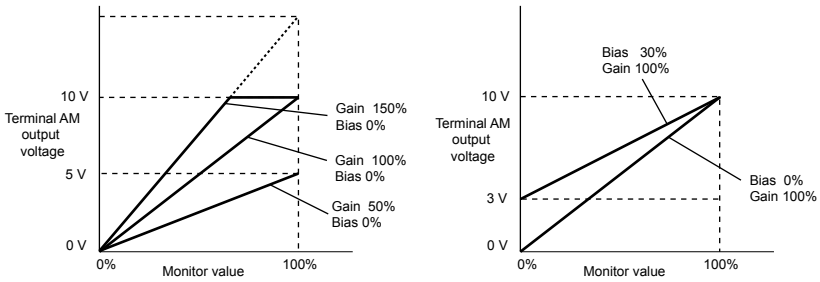

Figure 5.32 Analog Output Gain/Bias Setting

When viewing the settings for H4-02, terminal AM will output a voltage that is equal to 100% of the monitor value (considering the present setting). When viewing the settings for H4-03, terminal AM will output a voltage that is equal to 0% of the monitor value.

◆ H5: MEMOBUS/Modbus Serial Communication

Through the drives optional RS-422/485 interface, serial communication can be performed with programmable logic controllers (PLCs) or similar devices using the MEMOBUS/Modbus protocol.

The H5-□□ parameters are used to set up the drive for MEMOBUS/Modbus Communications. ***Refer to MEMOBUS/Modbus Serial Communication on page 193*** for detailed descriptions of the H5-□□ parameters.

5.7 L: Protection Functions

◆ L1: Motor Protection Functions

■ L1-01: Motor Overload Protection Function Selection

The drive has an electronic overload protection function that estimates the motor overload level based on output current, output frequency, thermal motor characteristics, and time. An oL1 fault will be triggered when motor overload is detected.

L1-01 sets the overload protection function characteristics according to the motor being used.

No.	Name	Setting Range	Default
L1-01	Motor Overload Protection Selection	0 to 2	1

Setting 0: Disabled - Motor Overload Protection is not Provided

This setting should be used if no motor overheat protection is desired or if multiple motors are connected to one drive. In this case it is recommended that you install a thermal relay for each motor as show in *Figure 5.33*

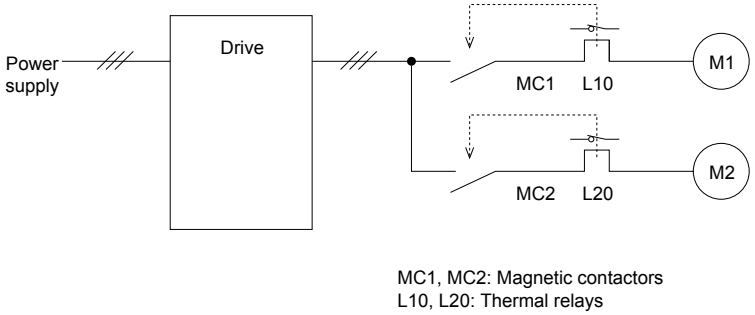

Figure 5.33 Example of Protection Circuit Design for Multiple Motors

NOTICE: *Protect each motor with individual thermal overloads when multiple motors are connected to one drive. Failure to comply could result in motor damage. Disable the electronic overload protection of the drive (L1-01 = "0: Disabled") and protect each motor with individual motor thermal overloads.*

Setting 1: General Purpose Motor (standard self-cooled)

Because the motor is self-cooled, the overload tolerance drops when the motor speed is lowered. The drive appropriately adjusts the electrothermal trigger point according to the motor overload characteristics, protecting the motor from overheat throughout the entire speed range.

Overload Tolerance	Overload Characteristics	Cooling Ability
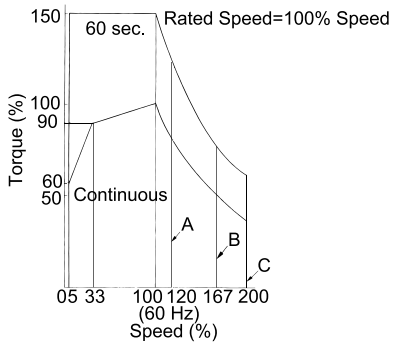	Motor designed to operate from line power. Motor cooling is most effective when running at rated nameplate base frequency (check the motor specifications).	Continuous operation at less than line power frequency with 100% load can trigger motor overload protection (oL1). A fault is output and the motor will coast to stop.

Setting 2: Drive Dedicated Motor (constant torque, 1:10)

Use this setting when operating a drive duty motor with a torque ratio of 1:10. This motor type is allowed to run with 100% load from 10% up to 100% speed. Running slower speeds with full load can trigger an overload fault.

Overload Tolerance	Overload Characteristics	Cooling Ability
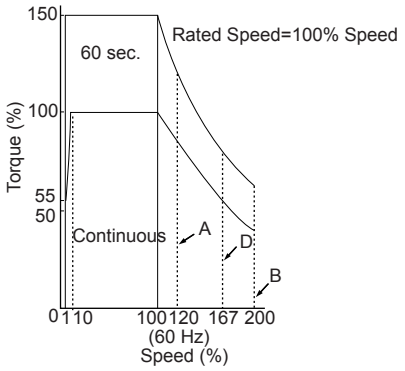	Motor is designed to effectively cool itself even at low speeds (as lower as 6 Hz).	Continuous operation with 100% load from 6 Hz to 50/60 Hz.

■ L1-02: Motor Overload Protection Time

Sets the time it takes the drive to detect motor overheat due to overload. This setting rarely requires adjustment, but should correlate with the motor overload tolerance protection time for performing a hot start.

No.	Name	Setting Range	Default
L1-02	Motor Overload Protection Time	0.1 to 5.0 min	1.0 min

- Defaulted to operate with an allowance of 150% overload operation for one minute.
- *Figure 5.34* shows an example of the electrothermal protection operation time using a general-purpose motor operating at 60 Hz with L1-02 set to one minute.

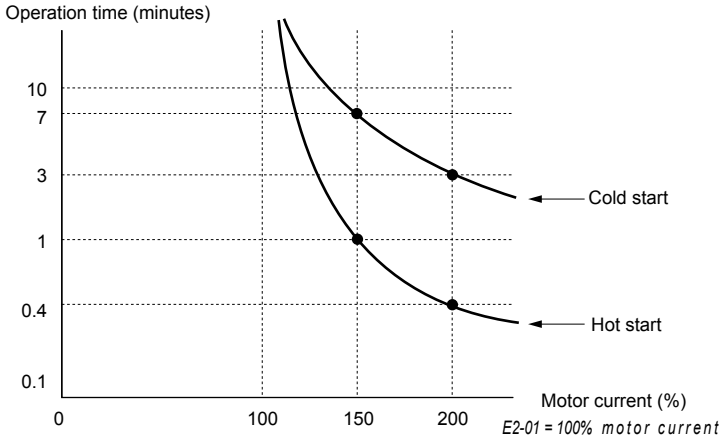

Figure 5.34 Motor Protection Operation Time

■ L1-13: Continuous Overload Detection Selection

Determines whether or not to hold the current value of the electrothermal motor protection (L1-01) when the power supply is interrupted.

No.	Name	Setting Range	Default
L1-13	Continuous Electronic Thermal Overload Protection Selection	0 or 1	1

Setting 0: Disabled

Setting 1: Enabled

◆ L2: Momentary Power Loss Ride-Thru

■ L2-01: Momentary Power Loss Operation Selection

When a momentary power loss occurs (DC bus voltage falls below the level set in L2-05), the drive can be set to automatically return to the operation it was performing when the power went out based on certain conditions.

No.	Name	Setting Range	Default
L2-01	Momentary Power Loss Operation Selection	0 to 2	0

Setting 0: Disabled (default)

If power is not restored within 15 ms, a Uv1 fault will result and the drive will stop the motor.

Setting 1: Enabled, with Time Limit

When a momentary power loss occurs, the drive will attempt to restart and perform Speed Search if power is restored within a certain period of time. If power is not restored within this time, then a Uv1 fault is triggered and the drive output will be shut off. The allowable time for the momentary power loss condition is dependant on the drive capacity.

Table 5.17 Allowable Momentary Power Loss Time by Drive Model

Drive Model(s)	Allowable Power Loss Time (seconds)
J□BA0001~0003, J□2A0001~0004, J□4A0001~0002	0.1 s
J□BA0006, J□2A0006, J□4A0004	0.2 s
J□BA0010, J□2A0010, J□4A0005	0.3 s
J□2A0012, J□4A0009~0011	0.5 s
J□2A0020	1.0 s

Setting 2: Recover as Long as CPU has Power

Drive will try to restart as long as the CPU still has power. This allows for a longer ride-through time than setting L2-01 to 1. A Uv1 fault is not triggered.

Note: 1. When L2-01 is set to 1 or 2, and a magnetic contactor between motor and drive is used, be sure that the magnetic contactor is kept close as long as the drive attempts to restart.
2. When L2-01 is set to 1 or 2, “Uv” will flash on the operator while the drive is attempting to recover from a momentary power loss. A fault signal is not output at this time.

◆ L3: Stall Prevention

When the load is too high or acceleration and deceleration times are too short, the motor may be unable to keep up with the frequency reference, resulting in excessive slip. This “stalling” makes it impossible to decelerate or accelerate. The drive can prevent the motor from stalling and still reach the desired speed without the user needing to change the acceleration or deceleration time settings. The Stall Prevention function can be set separately for acceleration, operating at constant speeds, and deceleration.

■ L3-01: Stall Prevention During Acceleration Selection

Stall Prevention during acceleration is used when the motor loses speed during acceleration due to a relatively large load. It prevents overcurrent and motor overload (oL1) from occurring.

This parameter sets the Stall Prevention method for acceleration.

No.	Name	Setting Range	Default
L3-01	Stall Prevention Selection during Acceleration	0 to 1	1

Setting 0: Disabled

No Stall Prevention is provided. If the acceleration time setting is too short, the drive may not be able to accelerate within the set time and the motor may stall.

Setting 1: Enabled

Enables Stall Prevention during acceleration.

When the output current exceeds 85% of the level set in parameter L3-02, the acceleration rate is reduced. The acceleration is stopped when the current exceeds L3-02. Acceleration continues when the current falls below L3-02. The Stall Prevention level is automatically reduced in the field weakening area.

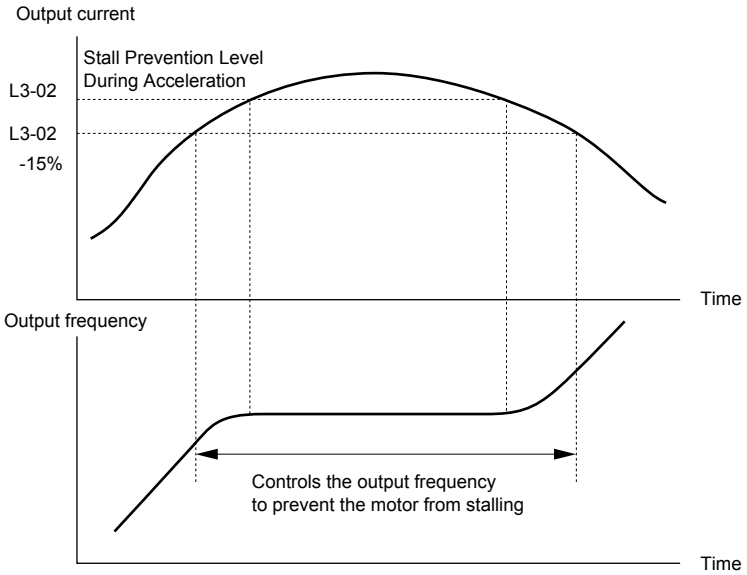

Figure 5.35 Stall Prevention During Acceleration for Induction Motors

■ L3-02: Stall Prevention Level During Acceleration

Sets the output current level at which the Stall Prevention during acceleration is activated.

No.	Name	Setting Range	Default
L3-02	Stall Prevention Level during Acceleration	0 to 150% <1>	<1>

<1> The upper limit and default value is determined by the duty rating and the carrier frequency derating selection (C6-01 and L8-38 respectively).

If stalling occurs with L3-02 set to its default value when using a motor that is relatively small compared to the drive, try lowering L3-02.

■ L3-04: Stall Prevention During Deceleration Selection

Stall Prevention during deceleration can control the deceleration based on the DC bus voltage and prevent an overvoltage fault caused by high inertia or rapid deceleration.

Selects the Stall Prevention method during deceleration.

No.	Name	Setting Range	Default
L3-04	Stall Prevention Selection During Deceleration Selection	0, 1, 4	1

Setting 0: Disabled

When this setting is used, the drive decelerates according to the set deceleration time. With high inertia loads or rapid deceleration, an overvoltage (ov) fault may occur. In this case use braking options or switch to another L3-04 selection.

Note: Use this setting whenever a Dynamic Braking Resistor or another braking option is used.

Setting 1: General Purpose Stall Prevention

With this setting the drive tries to decelerate in the set deceleration time. When the DC bus voltage exceeds the Stall Prevention level, the drive pauses deceleration. Deceleration continues as soon as the DC bus voltage drops below that level. Stall Prevention may be triggered repeatedly to avoid an overvoltage fault. The DC bus voltage level for Stall Prevention depends on the input voltage setting E1-01.

Drive Input Voltage		Stall Prevention Level during Deceleration
200 V Class		Vdc = 380 V
400 V Class	E1-01 ≥ 400 V	Vdc = 760 V
	E1-01 < 400 V	Vdc = 660 V

Note: 1. This setting should not be used in combination with a Dynamic Braking Resistor or other braking options. If Stall Prevention during deceleration is enabled, it will be triggered before the braking resistor option can operate.
2. This method may lengthen the total deceleration time compared to the set value. If this is not appropriate for the application consider using a braking option.

Figure 5.36 illustrates the function of Stall Prevention during deceleration.

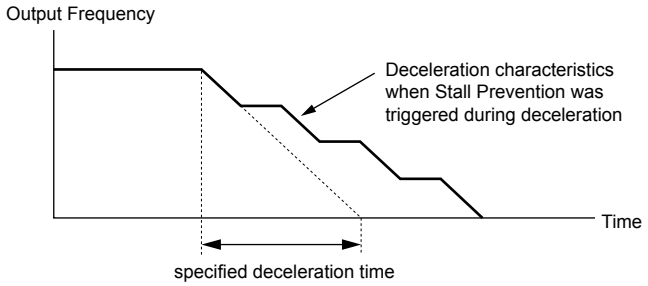

Figure 5.36 Stall Prevention During Deceleration

Setting 4: Overexcitation Braking

Enables overexcitation deceleration. Overexcitation Braking (increasing the motor flux) shortens the deceleration time compared to deceleration with no Stall Prevention (L3-04 = 0). Repetitive or long overexcitation deceleration can result in motor overheat. In such situations, either shorten the deceleration time setting or use a braking resistor option.

Use parameter n3-13 to fine-tune this function.

Note: Because the allowable flux level for overexcitation varies based on the flux saturation characteristics of the motor, set the proper overexcitation level by adjusting the excitation gain in parameter n3-13. Motor characteristics and inertia of the machine influence the deceleration time during overexcitation deceleration.

■ L3-05: Stall Prevention Selection During Run

Stall Prevention During Run can prevent a motor from stalling by automatically reducing the speed when a transient overload occurs while the motor is running at constant speed.

This parameter selects the Stall Prevention During Run method.

No.	Name	Setting Range	Default
L3-05	Stall Prevention Selection During Run	0 to 2	1

Note: When output frequency is 6 Hz or less, Stall Prevention During Run is disabled regardless of the setting in L3-05/06.

Setting 0: Disabled

Drive runs at the set frequency reference. A heavy load may cause the motor to stall and trip the drive with an oC or oL fault.

Setting 1: Decelerate Using C1-02

If the current exceeds the Stall Prevention level set in parameter L3-06, the drive decelerates at Decel Time 1 (C1-02). Once the current level drops below the value of L3-06 minus 2% for 100 ms it accelerates back to the frequency reference at the active acceleration time.

Setting 2: Decelerate Using C1-04

Same as setting 1 except the drive decelerates at decel time 2 (C1-04).

■ L3-06: Stall Prevention Level During Run

Sets the current level for Stall Prevention During Run. Depending on the setting of parameter L3-23 the level is automatically reduced in the constant power range (speed beyond base speed).

No.	Name	Setting Range	Default
L3-06	Stall Prevention Level During Run	30 to 150 <1>	<1>

<1> The upper limit and default for this setting is determined by C6-01 and L8-38.

◆ L4: Speed Agree

These parameters set up the speed agree and speed detection functions which can be assigned to the multi-function output terminal MA-MB-MC.

■ L4-01: Speed Agreement Detection Level

Parameter L4-01 sets the detection level for the digital output functions “Speed Agree,” “Frequency Detection 1,” and “Frequency Detection 2.”

No.	Name	Setting Range	Default
L4-01	Speed Agreement Detection Level	0.0 to 400.0 Hz	0.0 Hz

Refer to H2-01: Terminal MA/MB/MC Function Selection on page 95, Settings 2, 4, and 5.

■ L4-07: Speed Agreement Detection Selection

Determines when frequency detection is active using parameter L4-01.

No.	Name	Setting Range	Default
L4-07	Speed Agreement Detection Selection	0 or 1	0

Setting 0: No Detection During Baseblock

Setting 1: Detection Always Enabled

■ Notes on Controlling the Brake for the Hoist Application

- The frequency detection function is used for controlling the brake.
  When an external Baseblock command is present while a Run command is active, the frequency reference will be kept as long as the Run command is active. To avoid improper brake operation make sure that frequency detection is set so that the brake does not open during Baseblock (L4-07 = “0”, default).

Brake Open/Close		Brake Activation Level	
Function	Parameter	Signal	Parameter
Frequency Detection Conditions	L4-07 = 0	Frequency Detection Level	L4-01 = 2.0 to 3.0 Hz <1>
Frequency Detection 2	H2-01 = 5	Frequency Detection Width	2.0 Hz (fixed)

<1>If the load slips during stop, make it greater than E1-09 or 2.0 Hz until the load no longer slips.

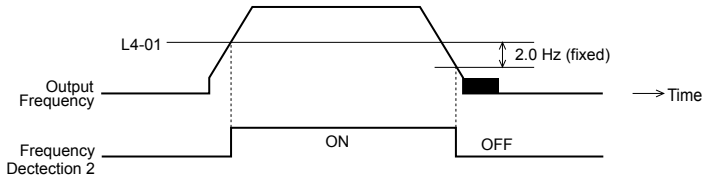

Figure 5.37 Frequency Detection 2

- The braking sequence should be designed as follows:
  - A normally open signal (N.O.) should be used to control the brake so that it is released when terminal MA-MC closes.
  - An external circuit should be added to ensure the brake is fully applied in case of a fault or emergency condition.
  - An additional external circuit should also be added to ensure the brake releases properly when an Up/Down Command is entered.
- When changing the speed using an analog signal, make sure that the source of the frequency reference is assigned to the control circuit terminals (b1-01 = 1).
- A sequence to open and close the holding brake appears in the diagram below.

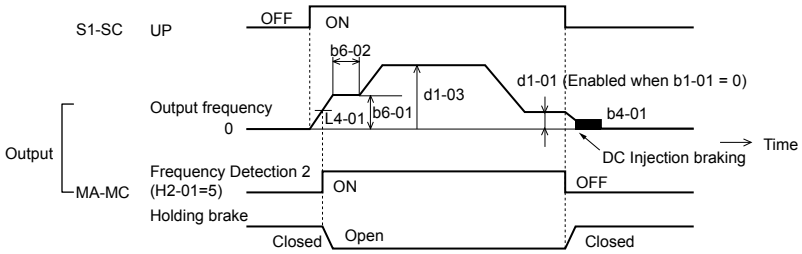

Figure 5.38 Holding Brake Time Chart

◆ L5: Fault Restart

The drive can be set up to perform a self-diagnostic check and resume the operation after a fault has occurred. When the self-check is successful and the cause of the fault has disappeared the drive will restart.

The drive can attempt to restart itself following the faults listed below.

Fault	Name	Fault	Name
oC	(Overcurrent)	PF	(Input Phase Loss)
oL1	(Motor Overload)	rH	(Braking Resistor Fault)
oL2	(Drive Overload)	Uv1	(DC Bus Undervoltage) <1>

Fault	Name	Fault	Name
oL3	(Overtorque 1)		

<1> When L2-01 is set to 1 or 2 (continue operation during momentary power loss)

Use parameter L5-01 to set up automatic fault restart.

To output a signal during fault restart, set H2-01 to 1E.

■ L5-01: Number of Auto Restart Attempts

Sets the number of times that the drive may attempt to restart itself.

No.	Name	Setting Range	Default
L5-01	Number of Auto Restarts	0 to 10	0

The restart counter is incremented at each restart attempt, regardless of whether the attempt was successful. When the counter reaches the number set in L5-01 the operation stops and the fault has to be reset manually after correcting the cause.

The number of fault restarts is reset back to zero when:

- The drive operates normally for ten minutes following a fault restart.
- A fault is cleared manually after protective functions are triggered.
- The power supply is cycled.

◆ L6: Torque Detection

The drive provides a torque detection function that triggers an alarm or fault signal when the load is too heavy (oL). It is set up using the L6-□□ parameters. To indicate an overload condition to an external device, the digital output should be programmed as shown below.

H2-01 Setting	Description
B	Torque detection 1, N.O. (output close when overload is detected)
17	Torque detection 1, N.C. (output opens when overload is detected)

Figure 5.39 shows the function of overtorque detection.

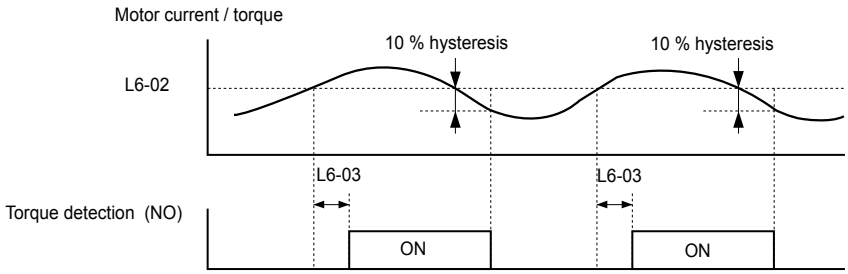

Figure 5.39 Overtorque Detection Operation

Note: The torque detection function uses a hysteresis of 10% of the drive rated output current/motor rated torque.

Note: When overtorque occurs in the application, the drive may stop due to overcurrent (oC) or overload (oL1). To prevent this, an overload situation should be indicated to the controller before oC or oL1 occur in the drive. Use the torque detection for this purpose.

■ L6-01: Torque Detection Selection

The torque detection function is triggered when the current/torque exceeds the levels set in parameter L6-02 for longer than the time set in L6-03. The parameters L6-01 select the detection condition and the operation at detection.

No.	Name	Setting Range	Default
L6-01	Torque Detection Selection	0 to 4	0

Setting 0: Disabled

Setting 1: oL3 at Speed Agree - Alarm

Overtorque detection is active only when the output speed is equal to the frequency reference, i.e., no detection during acceleration and deceleration. The operation continues after detection and an oL3 alarm is triggered.

Setting 2: oL3 at Run - Alarm

Overtorque detection works whenever a Run command is active. The operation continues after detection and an oL3 alarm is triggered.

Setting 3: oL3 at Speed Agree - Fault

Overtorque detection is active only when the output speed is equal to the frequency reference, i.e., no detection during acceleration and deceleration. The operation is stopped and an oL3 fault is triggered.

Setting 4: oL3 at Run - Fault

Overtorque detection works whenever a Run command is active. The operation is stopped and an oL3 fault is triggered.

■ L6-02: Torque Detection Level

These parameters the detection levels for the torque detection function.

No.	Name	Setting Range	Default
L6-02	Torque Detection Level	0 to 300%	150%

■ L6-03: Torque Detection Time

These parameters set the time that the levels set in L6-02 have to be exceeded before an alarm/fault is triggered.

No.	Name	Setting Range	Default
L6-03	Torque Detection time	0.0 to 10.0 s	0.1 s

◆ L8: Hardware Protection

■ L8-01: Internal Dynamic Braking Resistor Protection Selection (ERF type)

This parameter selects the dynamic braking resistor protection when using an optional heatsink mounted braking resistor (ERF type, 3% ED).

No.	Name	Setting Range	Default
L8-01	Internal Braking Resistor Protection	0 or 1	0

Setting 0: Disabled

Disables the braking resistor protection. Use this setting for any braking option other than the Yaskawa ERF Type resistor.

Setting 1: Enabled

Enables the protection for ERF type resistors.

■ L8-05: Input Phase Loss Protection Selection

Enables or disables the input phase loss detection.

No.	Name	Setting Range	Default
L8-05	Input Phase Loss Detection Selection	0 or 1	1

Setting 0: Disabled

Setting 1: Enabled

Enables the input phase loss detection. As detection is performed by measuring the DC bus ripple, a phase loss fault (PF) can also be triggered by power supply voltage imbalance or main circuit capacitor deterioration. Detection is disabled when:

- The drive is decelerating.
- No Run command is active.
- Output current is less than or equal to 30% of the drive rated current.

■ L8-10: Heatsink Cooling Fan Operation Selection

Selects the heatsink cooling fan operation.

No.	Name	Setting Range	Default
L8-10	Fan Operation Selection	0 or 1	0

Setting 0: Run with Timer

The fan is switched on when a Run command is active. It is switched off 60 s after the Run command has been released. Using this setting extends the fan lifetime.

Setting 1: Run always

The fan runs whenever power is supplied to the drive.

■ L8-12: Ambient Temperature Setting

If the temperature where the drive is mounted is above the specified values, the drive rated current must be reduced for optimal performance life. By setting the ambient temperature to parameter L8-12 and adjusting the installation method setting in L8-35, the drive rating automatically adapts to safe values.

No.	Name	Setting Range	Default
L8-12	Ambient Temperature Setting	-10 to +50 °C	30 °C

■ L8-18: Software CLA Selection

The Software Current Limit (CLA) is a drive protection function that prevents output transistor failures caused by high current. Parameter L8-18 enables or disables this function.

Note: This setting should not be changed unless absolutely necessary. For proper drive protection and operation leave the Software CLA function enabled.

No.	Name	Setting Range	Default
L8-18	Software Current Limit Selection	0 or 1	1

Setting 0: Disabled

The drive may trip on an oC fault if the load is too heavy or the acceleration is too short.

Setting 1: Enabled

When the soft CLA current level is reached, the drive reduces the output voltage in order to reduce the current. If the current level drops below the Software CLA level, then normal operation will continue.

■ L8-35: Installation Method Selection

Selects the type of installation and changes the drive overload (oL2) limits accordingly.

Note:
1. This parameter is not reset when the drive is initialized.
2. The value is preset to the appropriate value when the drive is shipped. Change the value only when using Side-by-Side installation or when mounting a standard drive with the heatsink outside the cabinet.

No.	Name	Setting Range	Default
L8-35	Installation Method Selection	0 to 3	0

Setting 0: IP20/Open-Chassis Drive

Must be selected if an IP20/Open-Chassis drive is installed with minimal 30 mm space to the next drive or a cabinet wall.

Setting 1: Side-by-Side Mounting

Must be selected if drives are Side-by-Side mounted with a minimum space of 2 mm.

Setting 2: IP20/NEMA Type 1 Drive

Must be selected if the drive has a IP20/NEMA Type 1 enclosure.

Setting 3: Finless Drive or External Heatsink Installation

Must be selected for finless drives or if a standard drive is mounted with the heatsink outside the cabinet.

■ L8-38: Carrier Frequency Reduction Selection

The drive can reduce the carrier frequency when the output current exceeds a certain level. This temporarily increases the overload capability (oL2 detection) and the drive can run through transient load peaks without tripping.

L8-38 selects the operation of the carrier frequency reduction function.

No.	Name	Setting Range	Default
L8-38	Carrier Frequency Reduction Selection	0 to 2	Determined by o2-04

Setting 0: Disabled

No carrier frequency reduction at high current.

Setting 1: Enabled for Output Frequencies below 6 Hz

The carrier frequency is reduced at speeds below 6 Hz when the current exceeds 100% of the drive rated current. The drive returns to its normal carrier frequency when the current falls below 88% or the output frequency exceeds 7 Hz.

Setting 2: Enabled for Entire Frequency Range

The carrier frequency is reduced at the following speeds:

- Below 6 Hz when the current exceeds 100% of the drive rated current.
- Above 7 Hz when the current exceeds 112% of the drive rated current.

The drive uses the delay time of 0.5 s and a hysteresis of 12% when switching the carrier frequency back to the set value.

5.8 n: Special Adjustments

The n parameters handle a variety of specialized adjustments and functions, including Hunting Prevention.

◆ n1: Hunting Prevention

Hunting Prevention keeps the drive from hunting as a result of low inertia and operating with light load.

■ n1-02: Hunting Prevention Gain Setting

Sets the gain for the Hunting Prevention Function.

No.	Name	Setting Range	Default
n1-02	Hunting Prevention Gain Setting	0.00 to 2.50	1.00

Normally, n1-02 does not need to be changed, but adjustment may help under the following conditions:

- If the motor vibrates while lightly loaded increase the gain by 0.1 until vibration ceases.
- If the motor stalls decrease the gain by 0.1 until the stalling ceases.

◆ n3: Overexcitation Deceleration

Overexcitation deceleration increases the flux during deceleration and allows shorter deceleration time settings than with normal deceleration without the use of a braking resistor. Enabled by setting L3-04 = 4.

Notes on Overexcitation Deceleration

- As regenerative energy is mainly dissipated as heat in the motor, the motor temperature will rise if overexcitation deceleration is applied frequently. In such cases, make sure the motor temperature does not exceed the maximum allowable value or consider using a braking resistor option instead.
- The drive decelerates at the active deceleration time. Make sure to set this time so that no overvoltage (ov) fault occurs.
- When a Run command is entered during overexcitation deceleration, overexcitation operation is cancelled and the drive will reaccelerate to the specified speed.
- Do not use overexcitation deceleration in combination with a braking resistor option.

Use parameter n3-13 for adjusting overexcitation deceleration.

■ n3-13: Overexcitation Deceleration Gain

Applies a gain to the V/f pattern output value during overexcitation deceleration, thereby determining the level of overexcitation. The drive returns to the normal V/f value after the motor has stopped or when it is accelerating to the frequency reference.

No.	Name	Setting Range	Default
n3-13	Overexcitation Deceleration Gain	1.00 to 1.40	1.10

The optimum setting for n3-13 depends on the motor flux saturation characteristics.

- Increase the gain by 1.25 to 1.30 to improve the breaking power of overexcitation.
- Reduce the value when the motor slip gets too high, which can trigger overcurrent (oC), motor overload (oL1), or drive overload (oL2) faults.

5.9 o: Operator Related Settings

These parameters concern the various functions and features of the digital operator.

◆ o1: Display Settings and Selections

These parameters determine how data is shown on the operator display.

■ o1-02: User Monitor Selection after Power Up

Selects which monitor parameter will be displayed upon power up. Defaulted to show the frequency reference when the drive is first turned on.

No.	Name	Setting Range	Default
o1-02	User Monitor Selection after Power Up	1 to 4	1

Setting 1: Frequency Reference (U1-01)

Setting 2: Forward/Reverse

Setting 3: Output Frequency (U1-02)

Setting 4: Output Current (U1-03)

■ o1-03: Digital Operator Display Selection

Parameter o1-03 allows the programmer to change the units used in the following parameters and monitors:

- U1-01: frequency reference
- U1-02: output frequency
- d1-01 to d1-08: frequency references

No.	Name	Setting Range	Default
o1-03	Digital Operator Display Selection	0 to 1	0

Setting 0: Hz

The frequency reference and monitors are displayed in Hz with a resolution of 0.01 Hz.

Setting 1: %

The frequency reference and monitors are displayed as a percentage with a resolution of 0.01%. 100% is equal to the maximum output frequency.

◆ o2: Operator Key Selections

These parameters determine the functions assigned to the operator keys.

■ o2-02: STOP Key Function Selection

Selects if the STOP key on the digital operator can be used to stop the operation when the drive is controlled from a remote source (i.e., not from digital operator).

No.	Name	Setting Range	Default
o2-02	STOP Key Function Selection	0 or 1	1

Setting 0: Disabled

The STOP key has no function when the drive is controlled by a source other than the digital operator. The drive can only be stopped from the Run command source that has been selected.

Setting 1: Enabled

The STOP key can be used to terminate the operation, even if the Run command source is not assigned to the digital operator. If operation has been interrupted by pressing the STOP key, the Run command must be cycled to restart the drive.

■ o2-04: Drive Model Selection

Parameter o2-04 matches the control board to the drive hardware. Proper setting of o2-04 is important for optimal performance and proper protection for the drive hardware. This parameter is configured at the factory and does not normally require adjustment in the field. It is available primarily to accommodate control board replacement in the event of damage.

No.	Name	Setting Range	Default
o2-04	Drive Model Selection	-	Depending on drive size

Note: 1. *Refer to Defaults by Drive Capacity (o2-04) and ND/HD (C6-01) on page 185* for a list of o2-04 settings and parameters that change depending on the drive model selection.
2. Drive performance will suffer if the correct drive capacity is not set to o2-04, and protective functions will fail to operate properly.

■ o2-05: Frequency Reference Setting Method Selection

Determines if the ENTER key must be used to input a frequency reference from the digital operator.

No.	Name	Setting Range	Default
o2-05	Frequency Reference Setting Method Selection	0 or 1	0

Setting 0: ENTER Key Required

Every change in the frequency reference setting on the digital operator has to be finalized by pressing the ENTER key before it becomes effective.

Setting 1: ENTER Key Not Required

The output frequency changes immediately when the reference is changed by the UP and DOWN key on the digital operator. The ENTER key does not need to be pressed. The frequency reference is saved five seconds after the Up or DOWN key has been released.

■ o2-06: Operation Selection when LED Operator is Disconnected

Determines if the drive will stop when an external LED operator (JVOP-182) is removed in LOCAL mode or with b1-02 set to 0.

No.	Name	Setting Range	Default
o2-06	Digital Operator Disconnection Operation	0 or 1	0

Setting 0: Continue Operation

The operation is continued.

Setting 1: Trigger a Fault

The operation is stopped and an “oPr” fault is triggered. The motor coasts to stop.

■ o2-09: Initialization Specification Selection

This parameter sets the regional specifications for the drive and should not be changed.

◆ o3: Copy Function

Use o3 parameters to Read, Copy, and Verify the parameter settings to and from the drive using an LED operator (option).

■ o3-01 Copy Function Selection

Parameter o3-01 selects the copy function operation.

No.	Name	Setting Range	Default
o3-01	Copy Function Selection	0 to 3	0

0: No Action

1: READ

All parameters are copied from the drive to the LED operator.

2: WRITE

All parameters are copied from the LED operator to the drive.

3: VERIFY

Parameter settings in the drive are compared to those in the LED operator.

Note: When using the copy function, the drive model number (o2-04) and the software number (U1-14) must match or an error will occur.

■ o3-02 Copy Function READ Permission

Parameter o3-02 can be used to prevent accidentally overwriting the data stored in the operator.

No.	Name	Setting Range	Default
o3-02	Copy Function READ Permission	0, 1	0

0: READ Prohibited

The data in the operator are write protected. The READ operation cannot be performed.

1: READ Permitted

The data in the operator are not write protected. The READ operation can be performed.

◆ o4: Maintenance Monitor Settings

■ o4-01: Accumulated Operation Time Setting

Parameter o4-01 sets the cumulative operation time and allows the user to set the starting value of the accumulated operation time displayed in monitor U4-01.

Note: The value in o4-01 is set in 10 h units. For example, a setting of 30 will set the cumulative operation time counter to 300 h. 300 h will also be displayed in monitor U4-01.

No.	Name	Setting Range	Default
o4-01	Accumulated Operation Time Setting	0 to 9999	0

■ o4-02: Accumulated Operation Time Selection

Selects the conditions for what is to be considered “accumulated operation time.” Accumulated operation time is displayed in U4-01.

No.	Name	Setting Range	Default
o4-02	Accumulated Operation Time Selection	0 or 1	0

Setting 0: Power On Time

The drive logs the time it is connected to a power supply, no matter if the motor is running or not.

Setting 1: Run Time

The drive logs the time that the output is active, i.e., whenever a Run command is active (even if the motor is not rotating) or a voltage is output.

■ o4-03: Cooling Fan Maintenance Setting

Sets the value of the cooling fan operation time base value used for the maintenance value displayed in U4-04. Be sure to reset this parameter back to 0 if the cooling fan is replaced.

Note:
1. The value in o4-03 is set in 10 h units.
2. The actual maintenance time depends on the environment the drive is used in.

No.	Name	Setting Range	Default
o4-03	Cooling Fan Operation Time	0 to 9999	0

■ o4-05: Capacitor Maintenance Setting

Sets value of the maintenance monitor for the DC bus capacitors displayed in U4-05 as a percentage of the total expected performance life. This value should be reset to 0 when the DC bus capacitors have been replaced.

Note: The actual maintenance time will depend on the environment the drive is used in.

No.	Name	Setting Range	Default
o4-05	Capacitor Maintenance Setting	0 to 150%	0%

■ o4-07: DC Bus Pre-charge Relay Maintenance Setting

Sets the value of the softcharge bypass relay maintenance time displayed in U4-06 as a percentage of the total expected performance life. This value should be reset to 0 when the relay has been replaced.

Note: The maintenance actual time depends on the environment the drive is used in.

No.	Name	Setting Range	Default
o4-07	DC Bus Pre-charge Relay Maintenance Setting	0 to 150%	0%

■ o4-09: IGBT Maintenance Setting

Sets the value of the IGBT maintenance time displayed in U4-07 as a percentage of the total expected performance life. This value should be reset to 0 when the IGBTs have been replaced.

Note: The actual maintenance time depends on the environment the drive is used in.

No.	Name	Setting Range	Default
o4-09	IGBT Maintenance Setting	0 to 150%	0%

■ o4-11: U2 Initialization

When the drive is initialized, the fault history monitors (U2-□□) are not reset. Parameter o4-11 can be used to initialize them.

No.	Name	Setting Range	Default
o4-11	U2 Initialization	0 or 1	0

Setting 0: No Action

The drive keeps a record of the fault history.

Setting 1: Reset Fault Data

Resets the data for the U2-□□ monitors. Once o4-11 is set to 1 and the ENTER key is pressed, the fault data are erased and the display returns to 0.

5.10 U: Monitor Parameters

Monitor parameters let the user view various aspects of drive performance as it is shown on the operator display.

Some monitors can be output from terminal AM by assigning the specific monitor parameter number to H4-01. ***Refer to H4-01: Multi-Function Analog Terminal AM Monitor Selection on page 101*** for details on assigning functions to the analog output.

◆ U1: Operation Status Monitors

Status monitors display drive status like output frequency, current etc. Refer to U1: Operation Status Monitors on page ***183*** for a complete list of U1-□□ monitors and descriptions.

◆ U2: Fault History

The fault history monitors can be used to view the current and the last occurred fault. Refer to U2: Fault History on page ***184*** for a list of U2-□□ monitors and descriptions.

U2-□□ monitors are not reset when the drive is initialized. ***Refer to o4-11: U2 Initialization on page 116*** for instructions to initialize the fault history.

◆ U4: Maintenance Monitors

Maintenance monitors show:

- Runtime data of the drive.
- Maintenance data and replacement information for various drive components.
- Highest peak current that has occurred and output frequency at the time the peak current occurred.

Refer to U4: Maintenance Monitors on page ***184*** for a complete list of U4-□□ monitors and descriptions.

This Page Intentionally Blank

6

Troubleshooting

This chapter provides descriptions of the drive faults, alarms, errors, related displays, and possible solutions. This chapter can also serve as a reference guide for tuning the drive during a trial run.

6.1 SECTION SAFETY....120
6.2 MOTOR PERFORMANCE FINE TUNING....122
6.3 DRIVE ALARMS, FAULTS, AND ERRORS....123
6.4 FAULT DETECTION....125
6.5 ALARM DETECTION....131
6.6 OPERATOR PROGRAMMING ERRORS....134
6.7 DIAGNOSING AND RESETTING FAULTS....135
6.8 TROUBLESHOOTING WITHOUT FAULT DISPLAY....136

6.1 Section Safety

⚠ DANGER

Electrical Shock Hazard

Do not connect or disconnect wiring while the power is on.

Failure to comply will result in death or serious injury.

⚠ WARNING

Electrical Shock Hazard

Do not operate equipment with covers removed.

Failure to comply could result in death or serious injury.

The diagrams in this section may illustrate drives without covers or safety shields to display details. Be sure to reinstall covers or shields before operating the drives and run the drives according to the instructions described in this manual.

Always ground the motor-side grounding terminal.

Improper equipment grounding could result in death or serious injury by contacting the motor case.

Do not touch terminals before the capacitors have fully discharged.

Failure to comply could result in death or serious injury.

Before wiring terminals, disconnect all power to the equipment. The internal capacitor remains charged even after the drive input power is turned off. The charge indicator LED will extinguish when the DC bus voltage is below 50 Vdc. To prevent electric shock, wait at least one minute after all indicators are off and measure the DC bus voltage level to confirm safe level.

Do not allow unqualified personnel to perform work on the drive.

Failure to comply could result in death or serious injury.

Installation, maintenance, inspection and servicing must be performed only by authorized personnel familiar with installation, adjustment and maintenance of AC drives.

Do not perform work on the drive while wearing loose clothing, jewelry, or without eye protection.

Failure to comply could result in death or serious injury.

Remove all metal objects such as watches and rings, secure loose clothing and wear eye protection before beginning work on the drive.

Do not remove covers or touch circuit boards while the power is on.

Failure to comply could result in death or serious injury.

Fire Hazard

Tighten all terminal screws to the specified tightening torque.

Loose electrical connections could result in death or serious injury by fire due to overheating of electrical connections.

Do not use an improper voltage source.

Failure to comply could result in death or serious injury by fire.

Verify that the rated voltage of the drive matches the voltage of the incoming drive input power before applying power.

Do not use improper combustible materials.

Failure to comply could result in death or serious injury by fire.

Attach the drive to metal or other noncombustible material.

NOTICE

Observe proper electrostatic discharge procedures (ESD) when handling the drive and circuit boards.

Failure to comply may result in ESD damage to the drive circuitry.

Never connect or disconnect the motor from the drive while the drive is outputting voltage.

Improper equipment sequencing could result in damage to the drive.

Do not use unshielded cable for control wiring.

Failure to comply may cause electrical interference resulting in poor system performance. Use shielded twisted-pair wires and ground the shield to the ground terminal of the drive.

Do not allow unqualified personnel to use the product.

Failure to comply could result in damage to the drive or braking circuit.

Carefully review instruction manual TOBPC72060000 when connecting a braking option to the drive.

Do not modify the drive circuitry.

Failure to comply could result in damage to the drive and will void warranty.

Yaskawa is not responsible for modification of the product made by the user.

Check all the wiring after installing the drive and connecting other devices to ensure that all connections are correct.

Failure to comply could result in damage to the drive.

6.2 Motor Performance Fine Tuning

This section offers helpful information for counteracting oscillation, hunting, or other faults that occur while performing a trial run.

Note: This section describes parameters that are commonly edited. Consult Yaskawa for more information on detailed settings and fine-tuning the drive.

◆ Parameters for Tuning the Drive

Table 6.1 Parameters for Tuning the Drive

Problem	Parameter No.	Corrective Action	Default Value	Suggested Setting
• Motor hunting and oscillation at speeds between 10 and 40 Hz	Hunting Prevention Gain (n1-02)	• If insufficient motor torque relative to the size of the load causes hunting, reduce the setting. • When motor hunting and oscillation occur with a light load, increase the setting. • Lower this setting if hunting occurs when using a motor with a relatively low inductance, such as a high-frequency motor or a motor with a larger frame size.	1.00	0.10 to 2.00
• Motor noise • Motor hunting and oscillation at speeds up to 40 Hz	Carrier Frequency Selection (C6-02)	• If the motor noise is too loud, increase the carrier frequency. • When motor hunting and oscillation occur at speeds up to 40 Hz, lower the carrier frequency. • The default setting for the carrier frequency depends on the drive capacity (o2-04) and the Drive Duty Selection (C6-01).	3/4 (depending on drive size)	1 to F
• Poor motor torque at speeds below 10 Hz • Motor hunting and oscillation	Torque Compensation Gain (C4-01)	• If motor torque is insufficient at speeds below 10 Hz, increase the setting. • If motor hunting and oscillation with a relatively light load, decrease the setting.	1.00	0.50 to 1.50
• Poor motor torque at low speeds • Motor instability at motor start	Mid Output Voltage A (E1-08) Minimum Output Voltage (E1-10)	• If torque is insufficient at speeds below 10 Hz, increase the setting. • If motor instability occurs at motor start, decrease the setting. **Note:** The recommended setting value is for 200 V class drives. Double this value when using a 400 V class drive.	E1-08: 16.0 V E1-10: 12.0 V	Initial value ±5 V
• Poor speed precision	Slip Compensation Gain (C3-01)	• After setting the motor-rated current (E2-01), motor-rated slip (E2-02) and motor no-load current (E2-03), adjust the slip compensation gain (C3-01).	-	0.5 to 1.5

Note: Use slip compensation to improve speed precision. First make sure that the proper values have been set for the motor rated current to E2-01, motor rated slip (E2-02), and motor no-load current (E2-03). Next, adjust the slip compensation gain set to C3-01 so that it is between 0.5 to 1.5.

◆ Motor Hunting and Oscillation Control Parameters

The following parameters indirectly affect motor hunting and oscillation.

Table 6.2 Parameters that Affect Control Performance in Applications

Name (Parameter No.)	Application
Accel/Decel Time (C1-01 through C1-09)	Adjusting accel and decel times will affect the torque presented to the motor during acceleration or deceleration.
S-Curve Characteristics (C2-01 through C2-04)	Prevents shock at the beginning and end of acceleration and deceleration.
Jump Frequency (d3-01 through d3-04)	Skips over the resonant frequencies of connected machinery.
Analog Filter Time Constant (H3-13)	Prevents fluctuation in the analog input signal due to noise.
Stall Prevention (L3-01 through L3-06)	• Prevents motor speed loss and overvoltage. Used when the load is too heavy and also during sudden acceleration/deceleration. • Adjustment is not normally required because Stall Prevention is enabled as a default. Disable Stall Prevention during deceleration (L3-04 = “0”) when using a braking resistor.

6.3 Drive Alarms, Faults, and Errors

◆ Types of Alarms, Faults, and Errors

Check the LED operator for information about possible faults if the drive or motor fails to operate. *Refer to Using the Digital LED Operator on page 54*.

If problems occur that are not covered in this manual, contact the nearest Yaskawa representative with the following information:

- Drive model
- Software version
- Date of purchase
- Description of the problem

Table 6.3 contains descriptions of the various types of alarms, faults, and errors that may occur while operating the drive.

Contact Yaskawa in the event of drive failure.

Table 6.3 Types of Alarms, Faults, and Errors

Type	Drive Responses to Alarms, Faults, and Errors
Faults	When the drive detects a fault: • The digital operator displays text that indicates the specific fault and the ALM indicator LED remains lit until the fault is reset. • The fault interrupts drive output and the motor coasts to a stop. • Depending on the setting, the drive and motor may stop via different methods than listed. • If a digital output is programmed for fault output (H2-01 = E), it will close if a fault occurs. When the drive detects a fault, it will remain inoperable until that fault has been reset. *Refer to Fault Reset Methods on page 135*.
Minor Faults and Alarms	When the drive detects an alarm or a minor fault: • The digital operator displays text that indicates the specific alarm or minor fault and the ALM indicator LED flashes. • The motor does not stop. • The multi-function contact output closes if set to be tripped by a minor fault (H2-01 = 10), but not by an alarm. • The digital operator displays text indicating a specific alarm and ALM indicator LED flashes. Remove the cause of an alarm or minor fault to automatically reset.
Operation Errors	When parameter settings conflict with one another or do not match hardware settings (such as with an option unit), it results in an operation error. When the drive detects an operation error: • The digital operator displays text that indicates the specific error. • The multi-function contact output does not operate. When the drive detects an operation error, it will not operate the motor until the error has been reset. Correct the settings that caused the operation error to reset.

◆ Alarm and Error Displays

■ Faults

When the drive detects a fault, the ALM indicator LEDs remain lit without flashing. If the LEDs flash, the drive has detected a minor fault or alarm. *Refer to Minor Faults and Alarms on page 124* for more information. Conditions such as overvoltage or external faults can trip both faults and minor faults, therefore it is important to note whether the LEDs remain lit or if the LEDs flash.

Table 6.4 Fault Displays

LED Operator Display		Name	Page
CE	CE	MEMOBUS/Modbus Communication Error	125
CoF	CoF	Current Offset Fault	125
CPF00 or CPF01	CPF00 or CPF01 <1>	CPF11 – RAM Fault	125
		CPF12 – FLASH Memory Fault	125
		CPF14 – Control Circuit Fault	125
		CPF17 – Timing Fault	125
		CPF18 – Control Circuit Fault	125
CPF02	CPF02	A/D Conversion Error	125
CPF06	CPF06	Drive specification mismatch during Terminal Board or Control Board replacement	125
CPF08	CPF08	EEPROM Serial Communications Fault	125
CPF20 or CPF21	CPF20 or CPF21 <2>	RAM Fault	125
		FLASH Memory Fault	125
		Watchdog Circuit Exception	125
		Clock Fault	125

LED Operator Display		Name	Page
CPF22	CPF22	A/D Conversion Error	126
CPF23	CPF23	PWM Feedback Data Fault	126
CPF24	CPF24	Drive Capacity Signal Fault	126
EF0	EF0	Option Unit External Fault	126
EF1 to EF5	EF1 to EF5	External Fault (input terminal S1 to S5)	126
Err	Err	EEPROM Write Error	126
oC	oC	Overcurrent	126
oFA01	oFA01	Option Disconnected	127
oH1	oH1	Heatsink Overheat	127
oL1	oL1	Motor Overload	127
oL2	oL2	Drive Overload	128
oL3	oL3	Overtorque Detection 1	128
oPr	oPr	Operator Connection Fault	128
ov	ov	Overvoltage	132
PF	PF	Input Phase Loss	129
rH	rH	Dynamic Braking Resistor	129

LED Operator Display		Name	Page
Uu1	Uv1	Undervoltage	129

LED Operator Display		Name	Page
Uu3	Uv3	Soft Charge Circuit Fault	129

<1> Displayed as CPF00 when occurring at drive power up. When one of the faults occurs after successfully starting the drive, the display will show CPF01.

<2> Displayed as CPF20 when occurring at drive power up. When one of the faults occurs after successfully starting the drive, the display will show CPF21.

■ Minor Faults and Alarms

When a minor fault or alarm occurs, the ALM LED flashes and the text display shows an alarm code. A fault has occurred if the text remains lit and does not flash. *Refer to Alarm Detection on page 131*. An overvoltage situation, for example, can trigger both faults and minor faults. It is therefore important to note whether the LEDs remain lit or if the LEDs flash.

Table 6.5 Minor Fault and Alarm Displays

LED Operator Display		Name	Minor Fault Output (H2-01 = 10)	Page
bb	bb	Drive Baseblock	No output	131
CALL	CALL	Serial Communication Transmission Error	YES	131
CE	CE	MEMOBUS/Modbus Communication Error	YES	131
CrST	CrST	Can Not Reset	YES	131
EF	EF	Run Command Input Error	YES	131
EF1 to EF5	EF1 to EF5	External Fault (input terminal S1 to S5)	YES	132
oH	oH	Heatsink Overheat	YES	132
oL3	oL3	Overtorque 1	YES	132
ov	ov	Overvoltage	YES	132
PASS	PASS	MEMOBUS/Modbus Test Mode Complete	No output	132
SE	SE	MEMOBUS/Modbus Test Mode Fault	YES	133
Uv	Uv	Undervoltage	YES	133

■ Operation Errors

Table 6.6 Operation Error Displays

LED Operator Display		Name	Page
oPE01	oPE01	Drive Unit Setting Error	134
oPE02	oPE02	Parameter Setting Range Error	134
oPE03	oPE03	Multi-Function Input Setting Error	134

LED Operator Display		Name	Page
oPE05	oPE05	Run Command Selection Error	134
oPE10	oPE10	V/f Data Setting Error	134
oPE11	oPE11	Carrier Frequency Setting Error	134

6.4 Fault Detection

◆ Fault Displays, Causes and Possible Solutions

Table 6.7 Detailed Fault Displays, Causes and Possible Solutions

LED Operator Display		Fault Name
CE	CE	MEMOBUS/Modbus Communication Error No data was received for longer than 2 seconds.
Cause		**Possible Solution**
Faulty communications wiring, or a short circuit exists.		• Check for faulty wiring. • Correct the wiring. • Check for loose wiring and short circuits. Repair as needed.
A communications data error occurred due to noise.		• Check the various options available to minimize the effects of noise. • Counteract noise in control circuit, main circuit, and ground wiring. • Use Yaskawa-recommended cables, or another type of shielded line. Ground the shield on the controller side or on the drive input power side. • Ensure that other equipment such as switches or relays do not cause noise and use surge suppressors if required. • Separate all wiring for communications devices from drive input power lines. Install a noise filter to the input side of the drive input power.
LED Operator Display		**Fault Name**
CoF	CoF	Current Offset Fault There is a problem with the current detection circuit.
Cause		**Possible Solution**
While the drive automatically adjusted the current offset, the calculated value exceeded the allowable setting range.		Replace the drive.
LED Operator Display		**Fault Name**
CPF00 or CPF01	CPF00 or CPF01	CPF11 – RAM Fault CPF12 – Problem with the ROM (FLASH memory) CPF14 – CPU error (CPU operates incorrectly due to noise, etc.) CPF17 – A timing error occurred during an internal process CPF18 – CPU error (CPU operates incorrectly due to noise, etc.)
Cause		**Possible Solution**
Hardware is damaged.		Replace the drive.
LED Operator Display		**Fault Name**
CPF02	CPF02	A/D Conversion Error An A/D conversion error occurred.
Cause		**Possible Solution**
Control circuit is damaged.		Cycle power to the drive. If the problem continues, replace the drive.
Control circuit terminals have shorted out (+V, AC).		• Check for wiring errors along the control circuit terminals. • Correct the wiring. Check the resistance of the speed potentiometer and related wiring.
Control terminal input current has exceeded allowable levels.		• Check the input current. • Reduce the current input to control circuit terminal (+V) to 20 mA.
LED Operator Display		**Fault Name**
CPF06	CPF06	EEPROM Data Error There is an error in the data saved to EEPROM.
Cause		**Possible Solution**
Control circuit is damaged.		Cycle power to the drive. If the problem continues, replace the drive.
The power supply was switched off when parameters were written (e.g., using an option unit).		Reinitialize the drive (A1-03).
LED Operator Display		**Fault Name**
CPF08	CPF08	EEPROM Communication Fault EEPROM communications are not functioning properly.
Cause		**Possible Solution**
Control circuit is damaged.		Cycle power to the drive. If the problem persists, replace the drive.
LED Operator Display		**Fault Name**
CPF20 or CPF21	CPF20 or CPF21	One of the following faults occurred: RAM fault, FLASH memory error, watchdog circuit exception, clock error • RAM fault. • FLASH memory error (ROM error). • Watchdog circuit exception (self-diagnostic error). • Clock error.
Cause		**Possible Solution**
Hardware is damaged.		Replace the drive.

LED Operator Display		Fault Name
CPF22	CPF22	A/D Conversion Fault A/D conversion error.
Cause		**Possible Solution**
Control circuit is damaged.		• Cycle power to the drive. *Refer to Diagnosing and Resetting Faults on page 135*. • If the problem continues, replace the drive.
LED Operator Display		**Fault Name**
CPF23	CPF23	PWM Feedback Fault PWM feedback error.
Cause		**Possible Solution**
Hardware is damaged.		Replace the drive.
LED Operator Display		**Fault Name**
CPF24	CPF24	Drive Capacity Signal Fault Entered a capacity that does not exist. (Checked when the drive is powered up.)
Cause		**Possible Solution**
Hardware is damaged.		Replace the drive.
LED Operator Display		**Fault Name**
EF0	EF0	MEMOBUS/Modbus Communication External Fault An external fault condition is present.
Cause		**Possible Solution**
An external fault was received from the PLC with other than H5-04 = 3 “alarm only” (the drive continued to run after external fault).		• Remove the cause of the external fault. • Remove the external fault input from the PLC.
Problem with the PLC program.		Check the PLC program and correct problems.
LED Operator Display		**Fault Name**
EF1	EF1	External Fault (input terminal S1) External fault at multi-function input terminal S1.
EF2	EF2	External Fault (input terminal S2) External fault at multi-function input terminal S2.
EF3	EF3	External Fault (input terminal S3) External fault at multi-function input terminal S3.
EF4	EF4	External Fault (input terminal S4) External fault at multi-function input terminal S4.
EF5	EF5	External Fault (input terminal S5) External fault at multi-function input terminal S5.
Cause		**Possible Solution**
An external device has tripped an alarm function.		Remove the cause of the external fault and reset the fault.
Wiring is incorrect.		• Ensure the signal lines have been connected properly to the terminals assigned for external fault detection (H1-□□ = 20 to 2F). • Reconnect the signal line.
Incorrect setting of multi-function contact inputs.		• Check if the unused terminals set for H1-□□ = 20 to 2F (External Fault). • Change the terminal settings.
LED Operator Display		**Fault Name**
Err	Err	EEPROM Write Error Data does not match the EEPROM being written to.
Cause		**Possible Solution**
-		• Press the ENTER button. • Correct the parameter settings. • Cycle power to the drive. *Refer to Diagnosing and Resetting Faults on page 135*.
LED Operator Display		**Fault Name**
oC	oC	Overcurrent Drive sensors have detected an output current greater than the specified overcurrent level.
Cause		**Possible Solution**
The motor has been damaged due to overheating or the motor insulation is damaged.		• Check the insulation resistance. • Replace the motor.
One of the motor cables has shorted out or there is a grounding problem.		• Check the motor cables. • Remove the short circuit and power the drive back up.
		• Check the resistance between the motor cables and the ground terminal⏚. • Replace damaged cables.
The load is too heavy.		• Measure the current flowing into the motor. • Replace the drive with a larger capacity unit if the current value exceeds the rated current of the drive. • Determine if there is sudden fluctuation in the current level. • Reduce the load to avoid sudden changes in the current level or switch to a larger drive.

The acceleration or deceleration times are too short.	Calculate the torque needed during acceleration relative to the load inertia and the specified acceleration time. If the right amount of torque cannot be set, make the following changes: • Increase the acceleration time (C1-01, -03) • Increase the S-curve characteristics (C2-01 through C2-04) • Increase the capacity of the drive.
The drive is attempting to operate a specialized motor or a motor larger than the maximum size allowed.	• Check the motor capacity. • Ensure that the rated capacity of the drive is greater than or equal to the capacity rating found on the motor nameplate.
Magnetic contactor (MC) on the output side of the drive has turned on or off.	Set up the operation sequence so that the MC is not tripped while the drive is outputting current.
V/f setting is not operating as expected.	• Check the ratios between the voltage and frequency. • Set parameter E1-04 through E1-10 appropriately. • Lower the voltage if it is too high relative to the frequency.
Excessive torque compensation.	• Check the amount of torque compensation. • Reduce the torque compensation gain (C4-01) until there is no speed loss and less current.
Drive fails to operate properly due to noise interference.	• Review the possible solutions provided for handling noise interference. • Review the section on handling noise interference and check the control circuit lines, main circuit lines and ground wiring.
Overexcitation gain is set too high.	• Check if fault occurs simultaneously to overexcitation function operation. • Consider motor flux saturation and reduce the value of n3-13 (Overexcitation Deceleration Gain).
Run command applied while motor was coasting.	• Program the Speed Search command input through one of the multi-function contact input terminals (H1-□□ = “61” or “62”).
The motor cable is too long	Use a larger drive.

LED Operator Display		Fault Name
oFA01	oFA01	Option Unit Fault Replace the option unit.
Cause		**Possible Solution**
The option unit is not properly connected to the drive.		Turn the power off and reconnect the option unit.

LED Operator Display		Fault Name
oH1	oH1	Overheat 1 (Heatsink Overheat) The temperature of the heatsink has exceeded the overheat detection level.
Cause		**Possible Solution**
Surrounding temperature is too high.		• Check the temperature surrounding the drive. • Improve the air circulation within the enclosure panel. • Install a fan or air conditioner to cool the surrounding area. • Remove anything near the drive that might be producing excessive heat.
Load is too heavy.		• Measure the output current. • Lower the carrier frequency (C6-02). • Reduce the load.
Current flowing to control circuit terminal +V exceeded the tolerance level.		• Check the current level of the terminal. • Set the current to the control circuit terminal to be 20 mA or less.

LED Operator Display		Fault Name
oL1	oL1	Motor Overload The electrothermal sensor tripped overload protection.
Cause		**Possible Solution**
Load is too heavy.		Reduce the load.
Cycle times are too short during acceleration and deceleration.		Increase the acceleration and deceleration times (C1-01 through C1-04).
• Drive overloaded at low speeds. • Overload may occur at low speeds when using a general-purpose motor, even if operating within the rated current limitation.		• Reduce the load. • Increase the speed. • If the drive is supposed to operate at low speeds, either increase the motor capacity or use a motor specifically designed to operate with the drive.
Although a special type of motor is being used, the motor protection selection is set for a general-purpose motor (L1-01 = 1).		Set L1-01 = “2”.
Voltage is too high for the V/f characteristics.		• Adjust the user set V/f patterns (E1-04 through E1-10). Parameters E1-08 and E1-10 may need to be reduced. • If E1-08 and E1-10 are set too high, there may be very little load tolerance at low speed.
The wrong motor-rated current is set to E2-01.		• Check the motor-rated current. • Enter the value written on the motor nameplate to parameter E2-01.
The maximum frequency for the drive input power is set too low.		• Check the rated frequency indicated on the motor nameplate. • Enter the rated frequency to E1-06 (Base Frequency).
Multiple motors are running off the same drive.		Disable the Motor Protection function (L1-01 = “0”) and install a thermal relay to each motor.
The electrical thermal protection characteristics and motor overload characteristics do not match.		• Check the motor characteristics. • Correct the value set to L1-01 (Motor Protection Function). • Install an external thermal relay.
The electrical thermal relay is operating at the wrong level.		• Check the current rating listed on the motor nameplate. • Check the value set for the motor-rated current (E2-01).

Motor overheated by overexcitation operation.	• Overexcitation increases the motor losses and thereby the motor temperature. If applied too long, motor damage can occur. Prevent excessive overexcitation operation or apply proper cooling to the motor. • Reduce the excitation deceleration gain (n3-13). • Set L3-04 (Stall Prevention during Deceleration) to a value other than 4.
Output current fluctuation due to input phase loss	Check the power supply for phase loss.

LED Operator Display		Fault Name
oL2	oL2	Drive Overload The thermal sensor of the drive triggered overload protection.

Cause	Possible Solution
Load is too heavy.	Reduce the load.
Cycle times are too short during acceleration and deceleration.	Increase the settings for the acceleration and deceleration times (C1-01 through C1-04).
Voltage is too high for the V/f characteristics.	• Adjust the preset V/f pattern (E1-04 through E1-10). This will mainly involve reducing E1-08 and E1-10. • Be careful not to lower E1-08 and E1-10 excessively because this reduces load tolerance at low speeds.
Drive capacity is too small.	Replace the drive with a larger model.
Overload occurred when operating at low speeds.	• Reduce the load when operating at low speeds. • Replace the drive with a model that is one frame size larger. • Lower the carrier frequency (C6-02).
Excessive torque compensation.	Reduce the torque compensation gain (C4-01) until there is no speed loss but less current.
Output current fluctuation due to input phase loss	Check the power supply for phase loss.

LED Operator Display		Fault Name
oL3	oL3	Overtorque Detection 1 The current has exceeded the value set for torque detection (L6-02) for longer than the allowable time (L6-03).

Cause	Possible Solution
Parameter settings are not appropriate for the type of load.	Check the settings of parameters L6-02 and L6-03.
There is a fault on the machine side (e.g., the machine is locked up).	Check the status of the load. Remove the cause of the fault.

LED Operator Display		Fault Name
oPr	oPr	External Digital Operator Connection Fault The external operator has been disconnected from the drive. **Note:** An oPr fault will occur when both of the following conditions are true: • Output is interrupted when the operator is disconnected (o2-06 = 1) • The run command is assigned to the operator (b1-02 = 0 and LOCAL has been selected)

Cause	Possible Solution
External operator is not properly connected to the drive.	• Check the connection between the operator and the drive • Replace the cable if damaged • Turn off the drive input power and disconnect the operator. Next reconnect the operator and turn the drive input power back on.

LED Operator Display		Fault Name
ov	ov	Overvoltage Voltage in the DC bus has exceeded the overvoltage detection level. • For 200 V class: approximately 410 V • For 400 V class: approximately 820 V (740 V when E1-01 is less than 400)

Cause	Possible Solution
Deceleration time is too short and regenerative energy flows from the motor into the drive.	• Increase the deceleration time (C1-02, -04). • Install a braking resistor or a dynamic braking resistor unit. • Enable stall prevention during deceleration (L3-04 = “1”). Stall prevention is enabled as the default setting.
Excessive braking load.	The braking torque was too high, causing regenerative energy to charge the DC bus. Reduce the braking torque, use a braking option, or lengthen decel time.
Surge voltage entering from the drive input power.	Install a DC reactor. **Note:** Voltage surge can result from thyristor convertor and phase advancing capacitor using same drive main input power supply.
Ground fault in the output circuit causing the DC bus capacitor to overcharge.	• Check the motor wiring for ground faults. • Correct grounding shorts and turn the power back on.
Excessive regeneration when overshoot occurs after acceleration.	• Lengthen the S-curve at acceleration end.
Drive input power voltage is too high.	• Check the voltage. • Lower drive input power voltage within the limits listed in the specifications.
The dynamic braking transistor is damaged.	Replace the drive.
The braking transistor is wired incorrectly.	• Check braking transistor wiring for errors. • Properly rewire the braking resistor device.
Drive fails to operate properly due to noise interference.	• Review the list of possible solutions provided for controlling noise. • Review the section on handling noise interference and check the control circuit lines, main circuit lines and ground wiring.

Motor hunting occurs.		• Adjust the parameters that control hunting. • Set the hunting prevention gain (n1-02).
LED Operator Display		**Fault Name**
PF	PF	Input Phase Loss
		Drive input power has an open phase or has a large imbalance of voltage between phases. Detected when L8-05 = 1 (enabled).
Cause		**Possible Solution**
There is phase loss in the drive input power.		• Check for wiring errors in the main circuit drive input power. • Correct the wiring.
There is loose wiring in the drive input power terminals.		• Ensure the terminals are tightened properly. • Apply the tightening torque specified in this manual to fasten the terminals. ***Refer to Wire Gauges and Tightening Torque on page 37***
There is excessive fluctuation in the drive input power voltage.		• Check the voltage from the drive input power. • Review the possible solutions for stabilizing the drive input power. • Disable Input Phase Loss Detection (L8-05 = “0”). PF is detected if DC bus ripple is too high. If it is disabled, there is no fault but the ripple is still too high, thereby the capacitors are stressed more and lose lifetime.
There is poor balance between voltage phases.		• Stabilize drive input power or disable phase loss detection.
The main circuit capacitors are worn.		• Check the maintenance time for the capacitors (U4-05). • Replace the drive if U4-05 is greater than 90%.
		• Check for anything wrong with the drive input power. • If nothing is wrong with the drive input power, try the following solutions if the alarm continues: • Disable Input Phase Loss Protection selection (L8-05 = “0”). PF is detected if DC bus ripple is too high. If it is disabled, there is no fault but the ripple is still too high, thereby the capacitors are stressed more and lose lifetime. • Replace the drive.
LED Operator Display		**Fault Name**
rH	rH	Braking Resistor Overheat
		Braking resistor protection was triggered. Fault detection is enabled when L8-01 = 1 (disabled as a default). **Note:** The magnitude of the braking load trips the braking resistor overheat alarm, NOT the surface temperature. Using the braking resistor more frequently than its rating trips the alarm even when the braking resistor surface is not very hot.
Cause		**Possible Solution**
Deceleration time is too short and excessive regenerative energy is flowing back into the drive.		• Check the load, deceleration time and speed. • Reduce the load. • Increase the acceleration and deceleration times (C1-01 through C1-04). • Replace the braking option with a larger device that can handle the power that is discharged.
Excessive braking inertia.		Recalculate braking load and braking power. Then try reducing the braking load and checking the braking resistor settings and improve braking capacity.
The proper braking resistor has not been installed.		• Check the specifications and conditions for the braking resistor device. • Select the optimal braking resistor.
LED Operator Display		**Fault Name**
Uv1	Uv1	DC Bus Undervoltage
		One of the following conditions occurred while the drive was stopped: • Voltage in the DC bus fell below the undervoltage detection level. • For 200 V class: approximately 190 V (160 V for single phase drives) • For 400 V class: approximately 380 V (350 V when E1-01 is less than 400) The fault is output only if L2-01 = 0 or the DC bus voltage is below the Uv detection level for a certain time while L2-01 = 1.
Cause		**Possible Solution**
Input power phase loss.		• The main circuit drive input power is wired incorrectly. • Correct the wiring.
One of the drive input power wiring terminals is loose.		• Ensure there are no loose terminals. • Apply the tightening torque specified in this manual to fasten the terminals. ***Refer to Wire Gauges and Tightening Torque on page 37***
There is a problem with the voltage from the drive input power.		• Check the voltage. • Correct the voltage to within range listed in drive input power specifications.
The power has been interrupted.		Correct the drive input power.
Drive internal circuitry has become worn.		• Check the maintenance time for the capacitors (U4-05). • Replace the drive if U4-05 exceeds 90%.
The drive input power transformer is not large enough and voltage drops after switching on power.		Check the capacity of the drive input power transformer.
Air inside the drive is too hot.		Check the drive internal temperature.
Problem with the CHARGE indicator.		Replace the drive.
LED Operator Display		**Fault Name**
Uv3	Uv3	Undervoltage 3 (Inrush Prevention Circuit Fault)
		The inrush prevention circuit has failed.

Cause	Possible Solution
The contactor on the inrush prevention circuit is damaged.	• Cycle power to the drive. Check if the fault reoccurs. • Replace the drive if the fault continues to occur. • Check monitor U4-06 for the performance life of the inrush prevention circuit. • Replace the drive if U4-06 exceeds 90%.

6.5 Alarm Detection

Alarms are drive protection functions that do not operate the fault contact. The drive will return to original status when the cause of the alarm has been removed.

During an alarm condition, the Digital Operator display flashes and an alarm output is generated at the multi-function output (H2-01), if programmed.

Investigate the cause of the alarm and refer to *Table 6.8* for the appropriate action.

◆ Alarm Codes, Causes, and Possible Solutions

Table 6.8 Alarm Codes, Causes, and Possible Solutions

LED Operator Display		Minor Fault Name	
bb	bb	Baseblock Drive output interrupted as indicated by an external baseblock signal.	
Cause		**Possible Solutions**	**Minor Fault (H2-01 = 10)**
External baseblock signal entered via multi-function input terminal (S1 to S5).		Check external sequence and baseblock signal input timing.	No output
LED Operator Display		**Minor Fault Name**	
CALL	CALL	Serial Communication Transmission Error Communication has not yet been established.	
Cause		**Possible Solutions**	**Minor Fault (H2-01 = 10)**
Communications wiring is faulty, there is a short circuit, or something is not connected properly.		• Check for wiring errors. • Correct the wiring. • Remove and ground shorts and reconnect loose wires.	YES
Programming error on the master side.		Check communications at start-up and correct programming errors.	YES
Communications circuitry is damaged.		• Perform a self-diagnostics check. • Replace the drive if the fault continues to occurs.	YES
Terminal resistance setting is incorrect.		The terminal slave drive must have the internal terminal resistance switch set correctly. Place DIP switch S2 to the ON position.	YES
LED Operator Display		**Minor Fault Name**	
CE	CE	MEMOBUS/Modbus Communication Error Control data was not received correctly for two seconds.	
Cause		**Possible Solutions**	**Minor Fault (H2-01 = 10)**
A data error occurred due to noise.		• Check options available to minimize the effects of noise. • Counteract noise in the control circuit wiring, main circuit lines and ground wiring. • Reduce noise on the controller side. • Use surge absorbers on magnetic contactors or other equipment causing the disturbance. • Use cables recommended by Yaskawa or another type of shielded line. The shield should be grounded on the controller side or on the drive input power side. • Separate all wiring for communications devices from drive input power lines. Install a noise filter to the input side of the drive input power.	YES
Communication protocol is incompatible.		• Check the H5 parameter settings as well as the protocol setting in the controller. • Ensure settings are compatible.	YES
The communication cycle is longer than 2 seconds.		• Check the PLC. • Change the software settings in the PLC.	YES
Incompatible PLC software settings or there is a hardware problem.		• Check the PLC. • Remove the cause of the error on the controller side.	YES
Communications cable is disconnected or damaged.		• Check the connector for a signal through the cable. • Replace the communications cable.	YES
LED Operator Display		**Minor Fault Name**	
CrST	CrST	Can Not Reset	
Cause		**Possible Solutions**	**Minor Fault Output (H2-01 = 10)**
Fault reset was being executed when a run command was entered.		• Ensure that a run command cannot be entered from the external terminals or option unit during fault reset. • Turn off the run command.	YES
LED Operator Display		**Minor Fault Name**	
EF	EF	Forward/Reverse Run Command Input Error Both forward run and reverse run closed simultaneously for over 0.5 s.	
Cause		**Possible Solutions**	**Minor Fault Output (H2-01 = 10)**
Sequence error		Check the forward and reverse command sequence and correct the problem. **Note:** When minor fault EF detected, motor ramps to stop.	YES

LED Operator Display		Minor Fault Name
EF1	EF1	External fault (input terminal S1) External fault at multi-function input terminal S1.
EF2	EF2	External fault (input terminal S2) External fault at multi-function input terminal S2.
EF3	EF3	External fault (input terminal S3) External fault at multi-function input terminal S3.
EF4	EF4	External fault (input terminal S4) External fault at multi-function input terminal S4.
EF5	EF5	External fault (input terminal S5) External fault at multi-function input terminal S5.

Cause	Possible Solutions	Minor Fault Output (H2-01 = 10)
An external device has tripped an alarm function.	Remove the cause of the external fault and reset the multi-function input value.	YES
Wiring is incorrect.	• Ensure the signal lines have been connected properly to the terminals assigned for external fault detection (H1-□□ = 20 to 2F). • Reconnect the signal line.	YES
Multi-function contact inputs are set incorrectly.	• Check if the unused terminals have been set for H1-□□ = 20 to 2F (External Fault). • Change the terminal settings.	YES

LED Operator Display		Minor Fault Name
oH	oH	Heatsink Overheat The temperature exceeded 90-100 °C

Cause	Possible Solutions	Minor Fault Output (H2-01 = 10)
Surrounding temperature is too high	• Check the surrounding temperature. • Improve the air circulation within the enclosure panel. • Install a fan or air conditioner to cool surrounding area. • Remove anything near drive that may cause extra heat.	YES
Internal cooling fan has stopped.	• Replace the cooling fan. ***Refer to Cooling Fan Replacement on page 147***. • After replacing the drive, reset the cooling fan maintenance parameter to (o4-03 = “0”).	YES
Airflow around the drive is restricted.	• Provide proper installation space around the drive as indicated in the manual. ***Refer to Correct Installation Orientation on page 27***. • Allow for the specified space and ensure that there is sufficient circulation around the control panel.	YES
	• Check for dust or foreign materials clogging cooling fan. • Clear debris caught in the fan that restricts air circulation.	YES

LED Operator Display		Minor Fault Name
oL3	oL3	Overtorque 1 Drive output current was greater than L6-02 for longer than the time set in L6-03.

Cause	Possible Solutions	Minor Fault Output (H2-01 = 10)
Inappropriate parameter settings.	Check parameters L6-02 and L6-03.	YES
There is a fault on the machine side (e.g., the machine is locked up).	• Check the status of the machine. • Remove the cause of the fault.	YES

LED Operator Display		Minor Fault Name
ov	ov	DC Bus Overvoltage The DC bus voltage exceeded the trip point. For 200 V class: approximately 410 V For 400 V class: approximately 820 V (740 V when E1-01 < 400)

Cause	Possible Solutions	Minor Fault Output (H2-01 = 10)
Surge voltage present in the drive input power.	• Install a DC reactor or an AC reactor. • Voltage surge can result from a thyristor convertor and a phase advancing capacitor operating on the same drive input power system.	YES
• The motor is short-circuited. • Ground current has over-charged the main circuit capacitors via the drive input power.	• Check the motor power cable, relay terminals and motor terminal box for short circuits. • Correct grounding shorts and turn the power back on.	YES
Noise interference causes the drive to operate incorrectly.	• Review possible solutions for handling noise interference. • Review section on handling noise interference and check control circuit lines, main circuit lines and ground wiring. • If the magnetic contactor is identified as a source of noise, install a surge protector to the MC coil.	YES
	Set number of fault restarts (L5-01) to a value other than 0.	YES

LED Operator Display		Minor Fault Name
PASS	PASS	MEMOBUS/Modbus Communication Test Mode Complete

Cause	Possible Solutions	Minor Fault Output (H2-01 = 10)
MEMOBUS/Modbus test has finished normally.	This verifies that the test was successful.	No output

LED Operator Display		Minor Fault Name
SE	SE	MEMOBUS/Modbus Communication Test Mode Error

Cause	Possible Solutions	Minor Fault Output (H2-01 = 10)
A digital input programmed to 67H (MEMOBUS/Modbus test) was closed while the drive was running.	Stop the drive and run the test again.	No output

LED Operator Display		Minor Fault Name
Uv	Uv	Undervoltage One of the following conditions was true when the drive was stopped and a run command was entered: • DC bus voltage dropped below the under voltage detection level. • Contactor to suppress inrush current in the drive was open. • Low voltage in the control drive input power. This alarm outputs only if L2-01 is not 0 and DC bus voltage is below the detection level.

Cause	Possible Solutions	Minor Fault Output (H2-01 = 10)
Phase loss in the drive input power.	Check for wiring errors in the main circuit drive input power. Correct the wiring.	YES
Loose wiring in the drive input power terminals.	• Ensure the terminals have been properly tightened. • Apply the tightening torque specified in this manual to fasten the terminals. ***Refer to Wire Gauges and Tightening Torque on page 37***	YES
There is a problem with the drive input power voltage.	• Check the voltage. • Lower the voltage of the drive input power so that it is within the limits listed in the specifications.	YES
Drive internal circuitry is worn.	• Check the maintenance time for the capacitors (U4-05). • Replace the drive if U4-05 exceeds 90%.	YES
The drive input power transformer is not large enough and voltage drops when the power is switched on.	• Check for a tripped alarm when the magnetic contactor, line breaker and leakage breaker are turned on. • Check the capacity of the drive input power transformer.	YES
Air inside the drive is too hot.	• Check the temperature inside the drive.	YES
The CHARGE indicator light is broken or disconnected.	• Replace the drive.	YES

6.6 Operator Programming Errors

An Operator Programming Error (oPE) occurs when an inappropriate parameter is set or an individual parameter setting is inappropriate.

The drive will not operate until the parameter is set correctly; however, no alarm or fault outputs will occur. If an oPE occurs, investigate the cause and ***Refer to oPE Codes, Causes, and Possible Solutions on page 134*** for the appropriate action.

◆ oPE Codes, Causes, and Possible Solutions

Table 6.9 oPE Codes, Causes, and Possible Solutions

LED Operator Display		Error Name
oPE01	oPE01	Drive Capacity Setting Fault Drive capacity and then value set to o2-04 do not match.
Cause		**Possible Solutions**
The drive capacity setting (o2-04) and the actual capacity of the drive are not the same.		Correct the value set to o2-04.
LED Operator Display		**Error Name**
oPE02	oPE02	Parameter Range Setting Error
Cause		**Possible Solutions**
Parameters were set outside the possible setting range.		Set parameters to the proper values.
Note: Other errors are given precedence over oPE02 when multiple errors occur at the same time.		
LED Operator Display		**Error Name**
oPE03	oPE03	Multi-Function Input Selection Error A contradictory setting is assigned to multi-function contact inputs H1-01 to H1-05.
Cause		**Possible Solutions**
• The same function is assigned to two multi-function inputs. • Excludes “Not used” and “External Fault.”		• Ensure all multi-function inputs are assigned to different functions. • Re-enter the multi-function settings to ensure this does not occur.
The Up command was set but the Down command was not, or vice versa (settings 10 vs. 11).		Correctly set functions that need to be enabled in combination with other functions.
Run command for a 2-Wire sequence was set, but forward/reverse command for a 2-Wire sequence was not.		Correctly set functions that need to be enabled in combination with other functions.
The following two functions are set at the same time: • Up/Down Command (10 vs. 11) • Hold Accel/Decel Stop (A)		• Check if contradictory settings have been assigned to the multi-function input terminals at the same time. • Correct setting errors.
One of the following settings is set at the multi-function input terminals: • External Search Command 1 and External Search Command 2 (61 vs. 62) • Fast-Stop N.O. and Fast-Stop N.C. (15 vs. 17)		
LED Operator Display		**Error Name**
oPE05	oPE05	Run Command/Frequency Reference Source Selection Error
Cause		**Possible Solutions**
Frequency reference is assigned to an option unit (b1-01 = 2 or 3) that is not connected to the drive.		Reconnect the option unit to the drive.
The Run command is assigned to serial communication (b1-02 = 2) but no communication option is connected to the drive.		
LED Operator Display		**Error Name**
oPE10	oPE10	V/f Data Setting Error The following setting errors have occurred where: E1-04 is greater than or equal to E1-06 is greater than or equal to E1-07 is greater than or equal to E1-09.
Cause		**Possible Solutions**
—		Correct the settings for E1-04, -06, -07 and -09.
LED Operator Display		**Error Name**
oPE11	oPE11	Carrier Frequency Setting Error Correct the setting for the carrier frequency.
Cause		**Possible Solutions**
The following simultaneous contradictory settings: C6-05 is greater than 6 and C6-04 is greater than C6-03 (carrier frequency lower limit is greater than the upper limit). If C6-05 is less than or equal to 6, the drive operates at C6-03.		Correct the parameter settings.
Upper and lower limits between C6-02 and C6-05 contradict each other.		

6.7 Diagnosing and Resetting Faults

When a fault occurs and the drive stops, follow the instructions below to remove whatever conditions triggered the fault, then restart the drive.

◆ Fault Occurs Simultaneously with Power Loss

WARNING! *Electrical Shock Hazard. Ensure there are no short circuits between the main circuit terminals (R/L1, S/L2, and T/L3) or between the ground and main circuit terminals before restarting the drive. Failure to comply may result in serious injury or death and will cause damage to equipment.*

1. Turn on the drive input power.
2. Remove the cause of the fault and reset.

Note: To find out what faults were triggered, check U2-02 (Fault History).

Note: When the fault continues to be displayed after cycling power, remove the cause of the fault and reset.

◆ If the Drive Still has Power After a Fault Occurs

1. Look at the LED operator for information on the fault that occurred.
2. ***Refer to Fault Displays, Causes and Possible Solutions on page 125***
3. Reset the fault. ***Refer to Fault Reset Methods on page 135***.

◆ Viewing Fault History Data After Fault

	Step		Display/Result
1.	Turn on the drive input power. The first screen displays.	➡	
2.	Press ∧ until the monitor screen is displayed.	➡	
3.	Press ENTER to display the parameter setting screen.	➡	
4.	Press ∧ and > until U2-02 (Fault History) is displayed.	➡	
5.	Press ENTER to view previous fault (here, oC).	➡	

◆ Fault Reset Methods

After the Fault Occurs	Procedure	
Fix the cause of the fault, restart the drive, and reset the fault	Press RESET on the digital operator.	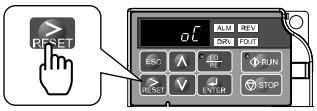
Resetting via Fault Reset Digital Input S4	Close then open the fault signal digital input via terminal S4. S4 is set fault reset as default (H1-04 = 12)	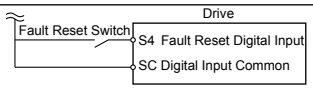
If the above methods do not reset the fault, turn off the drive main power supply. Reapply power after LED operator display is out.		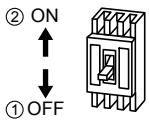

6.8 Troubleshooting without Fault Display

This section describes troubleshooting problems that do not trip an alarm or fault.

◆ Cannot Change Parameter Settings

Cause	Possible Solutions
The drive is running the motor (i.e., the Run command is present).	• Stop the drive and switch over to the Programming Mode. • Most parameters cannot be edited during run.
The Access Level is set to restrict access to parameter settings.	• Set the Access Level to allow parameters to be edited (A1-01 = 2).
The operator is not in the Parameter Setup Mode (the LED screen will display “PAr”).	• See what mode the LED parameter is current set for. • Parameters cannot be edited when in the Setup Mode (“STUP”). Switch modes so that “PAr” appears on the screen.
The wrong password was entered.	• If the password entered to A1-04 does not match the password saved to A1-05, then drive settings cannot be changed. • Reset the password. If you cannot remember the password: • Display parameter A1-04. Press the STOP button while pressing ∧ at the same time. Parameter A1-05 will appear. • Set a new password to parameter A1-05.
Undervoltage was detected.	• Check the drive input power voltage by looking at the DC bus voltage (U1-07). • Check all main circuit wiring.

◆ Motor Does Not Rotate Properly after Pressing RUN Button or after Entering External Run Command

■ Motor Does Not Rotate

Cause	Possible Solutions
The drive is not in the Drive Mode.	• Check if the DRV light on the LED operator is lit. • Enter the Drive Mode to begin operating the motor. *Refer to The Drive and Programming Modes on page 57*.
The LO/RE button was pushed.	Stop the drive and check if the correct frequency reference source is selected. If the operator keypad shall be the source, the LO/RE button LED must be on, if the source is REMOTE, it must be off. Take the following step to solve the problem: • Push the LO/RE button.
A Fast-Stop was executed and has not yet been reset.	Reset the Fast-Stop command.
Settings are incorrect for the source that provides the run command.	Check parameter b1-02 (Run Command Selection). Set b1-02 so that it corresponds with the correct run command source. 0: LED operator 1: Control circuit terminal (default setting) 2: MEMOBUS/Modbus communications
There is faulty wiring in the control circuit terminals.	• Check the wiring for the control terminal. • Correct wiring mistakes. • Check the input terminal status monitor (U1-10).
The drive has been set to accept the frequency reference from the incorrect source.	Check parameter b1-01 (Frequency Reference Selection 1). Set b1-01 to the correct source of the frequency reference. 0: LED operator 1: Control circuit terminal (default setting) 2: MEMOBUS/Modbus communications 3: Potentiometer (option)
The terminal set to accept the main speed reference is set to the incorrect voltage and/or current.	Check DIP switch S1. Next assign the correct input level to terminal A1 (H3-01). *Refer to DIP Switch S1 Analog Input Signal Selection on page 46*.
Selection for the sink/source mode is incorrect.	Check DIP switch S3. *Refer to Sinking/Sourcing Mode Switch on page 44*.
Frequency reference is too low.	• Check the frequency reference monitor (U1-01). • Increase the frequency by changing the maximum output frequency (E1-09).
Multi-function analog input is set up to accept gain for the frequency reference, but no voltage (current) has been provided.	• Check the multi-function analog input settings. • Check if H3-02 has been set to the proper values. • Check if the analog input value has been set properly.
The STOP button was pressed when the drive was started from a REMOTE source.	• When the STOP button is pressed, the drive will decelerate to stop. • Switch off the run command and then re-enter a run command. • The STOP button is disabled when o2-02 is set to 0.
Motor is not producing enough torque.	• Ensure the selected V/f pattern corresponds with the characteristics of the motor being used. • Increase both the minimum and mid output frequency voltages (E1-08, E1-10).
	Increase the frequency reference so that it is higher than the minimum frequency reference (E1-09).
	Increase the torque compensation gain (C4-01).

Cause	Possible Solutions
The drive is set for both 2-Wire and 3-Wire sequence at the same time.	• The drive is set for a 3-Wire sequence when one of parameters H1-03 through H1-05 is set to 0. • If the drive is supposed to be set up for a 2-Wire sequence, then ensure parameters H1-03 through H1-05 are not set to 0. • If the drive is supposed to be set up for a 3-Wire sequence, then H1-□□ must be set to 0.

■ Motor Rotates in the Opposite Direction from the Run Command

Cause	Possible Solutions
Phase wiring between the drive and motor is incorrect.	• Check the motor wiring. • Switch two motor cables (U, V, and W) to reverse motor direction. • Connect drive output terminals U/T1, V/T2 and W/T3 in the right order to the corresponding motor terminals U, V, and W. • Change the setting of parameter b1-14.
The forward direction for the motor is setup incorrectly.	Typically, forward is designated as being counterclockwise when looking from the motor shaft (refer to the figure below). 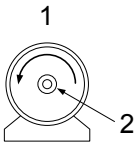 **1. Forward Rotating Motor (looking down the motor shaft)** **2. Motor Shaft**

Note: Check the motor specifications for the forward and reverse directions. The motor specifications will vary depending on the manufacturer of the motor.

■ Motor Rotates in One Direction Only

Cause	Possible Solutions
The drive prohibits reverse rotation.	• Check parameter b1-04. • Set the drive to allow the motor to rotate in reverse (b1-04 = “0”).
A Reverse run signal has not been entered, although 3-Wire sequence is selected.	• Make sure that one of the input terminals S3 to S5 used for the 3-Wire sequence has been set for reverse.

■ Motor is Too Hot

Cause	Possible Solutions
The load is too heavy.	If the load is too heavy for the motor, the motor will overheat as it exceeds its rated torque value for an extended period of time. Keep in mind that the motor also has a short-term overload rating in addition to the possible solutions provided below: • Reduce the load. • Increase the acceleration and deceleration times. • Check the values set for the motor protection (L1-01, L1-02) as well as the motor rated current (E2-01). • Increase motor capacity.
The air around the motor is too hot.	• Check the ambient temperature. • Cool the area until it is within the specified temperature range.
Insufficient voltage insulation between motor phases.	When the motor is connected to terminals U/T1, V/T2, and W/T3, voltage surges occur between the motor coils and drive switching. Normally, surges can reach up to three times the drive input power supply voltage (600 V for 200 V class, and 1200 V for 400 V class). • Use a motor with voltage tolerance higher than the max voltage surge. • Use a motor designed to work specifically with a drive when using a 400 V class unit. • Install an AC reactor on the output side of the drive.
The motor fan has stopped or is clogged.	Check the motor fan.

■ Motor Stalls During Acceleration or With Large Loads

Cause	Possible Solutions
Load is too heavy.	Take the following steps to resolve the problem: • Reduce the load. • Increase the acceleration time. • Increase motor capacity. • Although the drive has a Stall Prevention function and a Torque Compensation Limit function, accelerating too quickly or trying to drive an excessively large load can exceed the capabilities of the motor.

■ Motor Will Not Accelerate or the Acceleration Time is Too Long

Cause	Possible Solutions
Frequency reference is too low.	• Check the maximum output frequency (E1-04). • Increase E1-04 if it is set too low.
	Check U1-01 for proper frequency reference.
	Check if a frequency reference signal switch has been set to one of the multi-function input terminals.
	Check for low gain level set to terminal A1 (H3-03).

Cause	Possible Solutions
Load is too heavy.	• Reduce the load so that the output current remains within the motor-rated current. • In extruder and mixer applications, the load will sometimes increase as the temperature drops.
	Check if the mechanical brake is fully releasing as it should.
Acceleration time has been set too long.	Check if the acceleration time parameters have been set too long (C1-01, -03).
Motor characteristics and drive parameter settings are incompatible with one another in V/f Control.	• Set the correct V/f pattern so that it matches the characteristics of the motor being used. • Check the motor data and adjust V/f pattern settings.
Incorrect frequency reference setting.	• Check the multi-function analog input settings. • Ensure the analog input value is set to the right value (U1-13).
The Stall Prevention level during acceleration and deceleration set too low.	• Check the Stall Prevention level during acceleration (L3-02). • If L3-02 is set too low, acceleration will take a fair amount of time. • Increase L3-02.
The Stall Prevention level during run has been set too low.	• Check the Stall Prevention level during run (L3-06). • If L3-06 is set too low, speed will drop as the drive outputs torque. • Increase the setting value.

■ Drive Frequency Reference Differs from the Controller Frequency Reference Command

Cause	Possible Solutions
The analog input frequency gain and bias are set to incorrect values.	• Check the frequency reference terminal input gain level assigned to terminal A1 (parameter H3-03).

■ Poor Speed Control Accuracy

Cause	Possible Solutions
Slip compensation function disabled or set up incorrectly.	• Adjust the slip compensation gain (C3-01).

■ Deceleration Takes Longer Than Expected when Using a Braking Resistor

Cause	Possible Solutions
L3-04 is set incorrectly.	• Check the Stall Prevention Level during deceleration (L3-04). • If a braking resistor option has been installed, disable Stall Prevention during deceleration (L3-04 = “0”).
The deceleration time is set too long.	Set deceleration to more appropriate time (C1-02 and C1-04).
Insufficient motor torque.	• Assuming parameter settings are normal and that no overvoltage occurs when there is insufficient torque, it is likely that the demand on the motor has exceeded the motor capacity. • Use a larger motor.
Load exceeded the internal torque limit determined by the drive rated current.	Switch to a larger capacity drive.

■ Motor Hunting Occurs When Operating With a Light Load

Cause	Possible Solutions
Carrier frequency is too high.	Lower the carrier frequency setting C6-02.
Large V/f setting value at low speeds triggers overexcitation.	• Use parameters E1-04 through E1-10 to set the V/f pattern in relation to the load characteristics.
The maximum output frequency and the base frequency reference are not set properly in relationship to each other.	Set the proper values for the maximum output frequency and base frequency (E1-04, E1-06).
Hunting Prevention is set up incorrectly.	Adjust the hunting prevention gain (n1-02).

■ Noise From Drive or Output Lines When the Drive is Powered On

Cause	Possible Solutions
Relay switching in the drive generates excessive noise.	• Lower the carrier frequency (C6-02). • Install a noise filter on the input side of drive input power. • Install a noise filter on the output side of the drive. • Place the wiring inside a metal conduit to shield it from switching noise. • Ground the drive and motor properly. • Separate the main circuit wiring and the control lines.

■ Ground Fault Circuit Interrupter (GFCI) Trips During Run

Cause	Possible Solutions
Excessive leakage current trips MCCB.	• Increase the GFCI sensitivity or use GFCI with a higher threshold. • Lower the carrier frequency (C6-02). • Reduce the length of the cable used between the drive and the motor. • Install a noise filter or reactor on the output side of the drive.

■ Connected Machinery Vibrates When Motor Rotates

Excessive Motor Oscillation and Erratic Rotation

Cause	Possible Solutions
Poor balance between motor phases.	Check drive input power voltage to ensure that it provides stable power.

Unexpected Noise from Connected Machinery

Cause	Possible Solutions
The carrier frequency is at the resonant frequency of the connected machinery.	Adjust the carrier frequency using parameters C6-02 through C6-05.
The drive output frequency is the same as the resonant frequency of the connected machinery.	• Adjust the parameters used for the Jump Frequency function (d3-01 through d3-04) to skip the problem-causing bandwidth. • Place the motor on a rubber pad to reduce vibration.

Note: The drive may have trouble assessing the status of the load due to white noise generated when using Swing PWM (C6-02 = 7).

■ Oscillation or Hunting

Cause	Possible Solutions
Insufficient tuning.	Adjust Hunting prevention Gain Setting (n1-02).
The frequency reference is assigned to an external source and the signal is noisy.	• Ensure that noise is not affecting the signal lines. • Separate main circuit wiring and control circuit wiring. • Use twisted-pair cables or shielded wiring for the control circuit. • Increase the analog input time filter constant (H3-13).
The cable between the drive and motor is too long.	• Reduce the length of the cable.

■ Motor Rotates After the Drive Output is Shut Off

Cause	Possible Solutions
Low DC Injection Braking and the drive cannot decelerate properly.	• Adjust the DC Injection braking settings. • Increase the value of b2-02 (DC Injection Braking Current). • Increase the b2-04 (DC Injection Braking Time at Stop).

■ ov or Speed Loss Occurs When Starting into a Rotating Load

Cause	Possible Solutions
The load is already rotating when the drive is trying to start it.	• Stop the motor using DC Injection braking. Restart the motor. • Increase the value of b2-03 (DC Injection Braking Time at start). • Set a multi-function input terminal for external Speed Search command (H1-□□=“61” or “62” during restart).

■ Output Frequency is not as High as Frequency Reference

Cause	Possible Solutions
Frequency reference is set within the range of the Jump Frequency.	• Adjust the parameters used for the Jump Frequency function (d3-01, d3-02). • Enabling the Jump Frequency prevents the drive from outputting the frequencies specified in the Jump Frequency range.
Upper limit for the frequency reference has been exceeded.	• Set the maximum output frequency and the upper limit for the frequency reference to more appropriate values (E1-04, d2-01). • The following calculation yields the upper value for the output frequency = E1-04 x d2-01 / 100
Large load triggered Stall Prevention function during acceleration.	• Reduce the load. • Adjust the Stall Prevention level during acceleration (L3-02).

■ Buzzing Sound from Motor at 2 kHz

Cause	Possible Solutions
Exceeded 110% of the rated output current of the drive while operating at low speeds.	• If the output current rises too high at low speeds, the carrier frequency automatically reduces and causes a whining or buzzing sound. • If the sound is coming from the motor, disable carrier frequency derating (L8-38 = “0”). • Disabling the automatic carrier frequency derating increases the chances of an overload fault (oL2). Switch to a larger capacity motor if oL2 faults occur too frequently.

■ Motor Does Not Operate When the RUN Button on the Digital Operator is Pressed

Cause	Possible Solutions
The LOCAL/REMOTE mode is not selected properly.	Press the LOCAL/REMOTE button to switch. The LO/RE LED should be on for LOCAL mode.
The drive is not in drive mode.	A run command will not be issued. Exit to the drive mode and cycle the run command.
The frequency reference is too low.	• If the frequency reference is set below the frequency set in E1-09 (Minimum Output Frequency), the drive will not operate. • Raise the frequency reference to at least the minimum output frequency.

■ Motor Does Not Operate When an External Run Command is Input

Cause	Possible Solutions
The LOCAL/REMOTE mode is not selected properly.	Press the LOCAL/REMOTE button to switch. The LO/RE LED should be off for REMOTE mode.
The drive is not in Drive Mode.	A run command will not be issued. Exit to the Drive mode and cycle the run command.
The frequency reference is too low.	• If the frequency reference is set below the frequency set in E1-09 (Minimum Output Frequency), the drive will not operate. • Raise the frequency reference to at least the minimum output frequency.

■ Motor Stops During Acceleration or When a Load is Connected

Cause	Possible Solution
• The load is too heavy. • The limit of motor response may be reached during rapid acceleration. This may be a result of improper stall prevention or automatic torque boost function adjustment.	Increase the acceleration time (C1-01) or reduce the motor load. Also, consider increasing the motor size and/or drive size.

■ Motor Rotates in One Direction Only

Cause	Possible Solution
"Reverse run prohibited" is selected. If b1-04 (Reverse Prohibit Operation) is set to 1 (reverse run prohibited), the drive will not accept a reverse run command.	Set b1-04 = “0” to allow reverse run operation.

■ Peripheral Devices Affected by Drive Operation

Cause	Possible Solutions
Radio frequency interference may be generated by drive output PWM waveform.	• Change the Carrier Frequency Selection (C6-02) to lower the carrier frequency. This will help to reduce the amount of transistor switching noise. • Install an Input Noise Filter at the input power terminals. • Install an Output Noise Filter at the motor terminals. • Use conduit. Metal can shield electrical noise. • Ground the drive and motor. • Separate main circuit wiring from control wiring.

■ Ground Fault Interrupter Activates When Drive is Running

Cause	Possible Solutions
The output of the drive is a series of high frequency pulses (PWM), so there is a certain amount of leakage current. This may cause the ground fault interrupter to operate and cut off the drive input power.	• Change to a ground fault interrupter with a higher leakage current detection level (such as, a sensitivity current of 200 mA or greater per Unit, with an operating time of 0.1 s or more), or one that incorporates high-frequency corrective actions. • Change the Carrier Frequency Selection (C6-02) to lower the carrier frequency. **Note:** Leakage current increases in proportion to cable length.

7

Periodic Inspection & Maintenance

This chapter describes the periodic inspection and maintenance of the drive to ensure that it receives the proper care to maintain overall performance.

7.1 SECTION SAFETY....142
7.2 INSPECTION....144
7.3 PERIODIC MAINTENANCE....146
7.4 DRIVE COOLING FANS....147

7.1 Section Safety

⚠ DANGER

Electrical Shock Hazard

Do not connect or disconnect wiring while the power is on.

Failure to comply will result in death or serious injury.

⚠ WARNING

Electrical Shock Hazard

Do not operate equipment with covers removed.

Failure to comply could result in death or serious injury.

The diagrams in this section may show drives without covers or safety shields to show details. Be sure to reinstall covers or shields before operating the drives and run the drives according to the instructions described in this manual.

Always ground the motor-side grounding terminal.

Improper equipment grounding could result in death or serious injury by contacting the motor case.

Do not remove covers or touch circuit boards while the power is on.

Failure to comply could result in death or serious injury.

Do not allow unqualified personnel to perform work on the drive.

Failure to comply could result in death or serious injury.

Installation, maintenance, inspection, and servicing must be performed only by authorized personnel familiar with installation, adjustment, and maintenance of AC drives.

Do not perform work on the drive while wearing loose clothing, jewelry or without eye protection.

Failure to comply could result in death or serious injury.

Remove all metal objects such as watches and rings, secure loose clothing, and wear eye protection before beginning work on the drive.

Do not touch any terminals before the capacitors have fully discharged.

Failure to comply could result in death or serious injury.

Before wiring terminals, disconnect all power to the equipment. The internal capacitor remains charged even after the power supply is turned off. The charge indicator LED will extinguish when the DC bus voltage is below 50 Vdc. To prevent electric shock, wait at least one minute after all indicators are off and measure the DC bus voltage level to confirm safe level.

Fire Hazard

Tighten all terminal screws to the specified tightening torque.

Loose electrical connections could result in death or serious injury by fire due to overheating of electrical connections.

Do not use an improper voltage source.

Failure to comply could result in death or serious injury by fire.

Verify that the rated voltage of the drive matches the voltage of the incoming power supply before applying power.

Do not use improper combustible materials.

Failure to comply could result in death or serious injury by fire.

Attach the drive to metal or other noncombustible material.

NOTICE

Observe proper electrostatic discharge procedures (ESD) when handling the drive and circuit boards.

Failure to comply may result in ESD damage to the drive circuitry.

Never connect or disconnect the motor from the drive while the drive is outputting voltage.

Improper equipment sequencing could result in damage to the drive.

Do not use unshielded cable for control wiring.

Failure to comply may cause electrical interference resulting in poor system performance. Use shielded, twisted-pair wires and ground the shield to the ground terminal of the drive.

Do not allow unqualified personnel to use the product.

Failure to comply could result in damage to the drive or braking circuit.

Carefully review instruction manual TOBPC72060000 when connecting a braking option to the drive.

Do not modify the drive circuitry.

Failure to comply could result in damage to the drive and will void warranty.

Yaskawa is not responsible for any modification of the product made by the user. This product must not be modified.

Check all the wiring to ensure that all connections are correct after installing the drive and connecting any other devices.

Failure to comply could result in damage to the drive.

7.2 Inspection

Power electronics have limited life and may exhibit changed characteristics or performance deterioration after years of use under normal conditions. To help avoid such problems, it is important to perform preventive maintenance and periodic inspection on the drive.

Drives contain a variety of power electronics such as power transistors, semiconductors, capacitors, resistors, fans, and relays. The electronics in the drive serve a critical role in maintaining proper motor control.

Follow the inspection lists provided in this chapter as a part of a regular maintenance program.

Note: The drive will require more frequent inspection if it is placed in harsh environments, such as:

- High ambient temperatures
- Frequent starting and stopping
- Fluctuations in the AC supply or load
- Excessive vibrations or shock loading
- Dust, metal dust, salt, sulfuric acid, chlorine atmospheres
- Poor storage conditions.

Perform the first equipment inspection 3 months after installation.

◆ Recommended Daily Inspection

Table 7.1 outlines the recommended daily inspection for Yaskawa drives. Check the following items on a daily basis to avoid premature deterioration in performance or product failure. Copy this checklist and mark the "Checked" column after each inspection.

WARNING! *Electrical Shock Hazard. Do not connect or disconnect wiring while the power is on. Failure to comply can result in serious personal injury. Before servicing the drive, disconnect all power to the equipment. The internal capacitor remains charged even after the power supply is turned off. The charge indicator LED will extinguish when the DC bus voltage is below 50 Vdc. To prevent electric shock, wait at least one minute after all indicators are OFF and measure the DC bus voltage level to confirm safe level.*

Table 7.1 General Recommended Daily Inspection Checklist

Inspection Category	Inspection Points	Corrective Action	Checked
Motor	• Inspect for abnormal oscillation or noise coming from the motor.	• Check the load coupling. • Measure motor vibration. • Tighten all loose components.	
Cooling	• Inspect for abnormal heat generated from the drive or motor and visible discoloration.	• Check for excessive load. • Loose connections • Check for dirty heatsink or motor. • Ambient temperature	
Cooling Fan	• Inspect drive cooling fan operation.	• Check for clogged or dirty fan. • Check fan operation drive parameter.	
Environment	• Verify the drive environment complies with the specifications listed in the Installation section of this manual.	• Eliminate the source of contaminants or correct poor environment.	
Load	• The drive output current should not be higher than the motor or drive rating for an extended period of time.	• Check for excessive load. • Check the motor parameter settings of the drive.	
Power Supply Voltage	• Check main power supply and control voltages.	• Correct the voltage or power supply to within nameplate specifications. • Verify all main circuit phases.	

◆ Recommended Periodic Inspection

Table 7.2 outlines the recommended periodic inspections for Yaskawa drive installations. Periodic inspections should generally be checked every 3-6 months; however, the drive may require more frequent inspection due to poor environments or rigorous use. Operating and environmental conditions, along with experience in each application, will determine the actual inspection frequency for each installation. Periodic inspection will help to avoid premature deterioration in performance or product failure. Copy this checklist and mark the "Checked" column after each inspection.

■ Periodic Inspection

WARNING! *Electrical Shock Hazard. Do not connect or disconnect wiring while the power is on. Failure to comply can result in serious personal injury. Before servicing the drive, disconnect all power to the equipment. The internal capacitor remains charged even after the power supply is turned off. The charge indicator LED will extinguish when the DC bus voltage is below 50 Vdc. To prevent electric shock, wait at least one minute after all indicators are OFF and measure the DC bus voltage level to confirm safe level.*

Table 7.2 Periodic Inspection Checklist

Inspection Area	Inspection Points	Corrective Action	Checked
Main Circuit Periodic Inspection			
General	• Inspect equipment for discoloration from overheating or deterioration. • Inspect for damaged or deformed parts.	• Replace damaged components as required. • The drive has few serviceable parts and may require complete drive replacement.	
	• Inspect for dirt, foreign particles, or dust collection on components.	• Inspect enclosure door seal if present. Replace components if cleaning is not possible. • Use dry air to clear away foreign matter. Use a pressure of: 39.2×10^4 to 58.8×10^4 Pa (4 - 6 kg •cm^2).	
Conductors and Wiring	• Inspect wiring and connections for discoloration, damage, or heat stress. • Inspect wire insulation and shielding for wear.	• Repair or replace damaged wiring.	
Terminals	• Inspect terminals for stripped, damaged, or loose connections.	• Tighten loose screws and replace damaged screws or terminals.	
Relays and Contactors	• Inspect contactors and relays for excessive noise during operation. • Inspect coils for signs of overheating such as melted or cracked insulation.	• Check coil voltage for over or under voltage conditions. • Replace damaged removable relays contactors or circuit board.	
Braking Resistors	• Inspect for discoloration of heat stress on or around resistors.	• Minor discoloration may be acceptable. • If discoloration exists check for loose connections.	
Control Circuit Periodic Inspection			
General	• Inspect terminals for stripped, damaged or loose connections. • Check for tightness.	• Tighten loose screws and replace damaged screws or terminals. • If terminals are integral to a circuit board then board or drive replacement may be required.	
LED Periodic Inspection			
LEDs	• Make sure the LED lights correctly. • Inspect for dust or other foreign material that may have collected on surrounding components.	• Contact your Yaskawa representative if there is any trouble with the LED or keypad. • Clean the LED.	
Cooling System Periodic Inspection			
Cooling Fan	• Check for abnormal oscillation or unusual noise. • Check for damaged or missing fan blades.	• Replace as required. • *Refer to Drive Cooling Fans on page 147* for information on cleaning or replacing the cooling fan.	
Heatsink	• Inspect for dust or other foreign material collected on the surface.	• Use dry air to clear away foreign matter. • Use a pressure of 39.2×10^4 to 58.8×10^4 Pa (4 - 6 kg•cm^2).	
Air Duct	• Inspect air intake and exhaust openings. They must be free from obstruction and properly installed.	• Visually inspect the area. • Clear obstructions and clean air duct as required.	
Motor Periodic Inspection			
Operation Check	• Check for increased vibration or abnormal noise.	• Stop the motor and contact qualified maintenance personnel as required.	

Note: Periodic inspections should be performed every one or two years. The drive, however, may require more frequent inspection due to poor environments or rigorous use.

7.3 Periodic Maintenance

The drive has various "maintenance monitors." This feature provides advance maintenance warning and eliminates the need to shut down the entire system for unexpected problems. The drive allows the user to check the following maintenance periods.

- Cooling Fan
- Electrolytic Capacitors (Main Circuit)
- Inrush Prevention Circuit
- IGBT

◆ Replacement Parts

Table 7.3 contains the estimated performance life of components that require replacement during the life of the drive. Only use Yaskawa replacement parts for the appropriate drive model and revision.

Table 7.3 Estimated Performance Life

Component	Estimated Performance Life
Cooling Fan	2 ~ 3 years
Electrolytic Capacitors (Main Circuit)	10 years <1>

<1> The drive has few serviceable parts and may require complete drive replacement.

NOTICE: *Estimated performance life based on specific usage conditions. These conditions are provided for the purpose of replacing parts to maintain performance. Some parts may require more frequent replacement due to poor environments or rigorous use.*
Usage conditions for estimated performance life:
• Ambient temperature: Yearly average of 30 °C
• Load factor: 80% maximum
• Operation time: 12 hours a day

■ Performance Life Monitors

The drive calculates the maintenance period for components that may require replacement during the life of the drive. A percentage of the maintenance period is displayed on the LED digital operator by viewing the appropriate monitor parameter.

When the maintenance period reaches 100%, there is increased risk that the drive may malfunction. Yaskawa recommends checking the maintenance period regularly to ensure maximum performance life.

Refer to Recommended Periodic Inspection on page 144 for more details.

Table 7.4 Performance Life Monitors Used for Component Replacement

Parameter	Component	Contents
U4-04	Cooling Fan	Displays the accumulated cooling fan operation time as a percentage of the specified maintenance period (displayed in percent %).
U4-05	Main Circuit (DC bus) Electrolytic Capacitors	Displays the accumulated time the capacitors are used as a percentage of the specified maintenance period.
U4-06	Inrush (pre-charge) relay	Displays the number of times the drive is powered up as a percentage of the performance life of the inrush circuit.
U4-07	IGBT	Displays the percentage of the maintenance period reached by the IGBTs.

■ Related Drive Parameters

Table 7.5 Maintenance Parameter Settings

Parameter	Parameter Name
	Operator Display
o4-03	Cooling Fan Maintenance Setting (Operation Time)
o4-05	Capacitor Maintenance Setting
o4-07	Inrush Prevention Relay (pre-charge) Maintenance Setting
o4-09	IGBT Maintenance Setting

NOTICE: *After replacing parts, reset the appropriate maintenance parameters (o4-03, o4-05, o4-07, and o4-09) to 0. If these parameters are not reset, the function will continue to count down the performance life of the new replaced components.*

7.4 Drive Cooling Fans

NOTICE: *Follow cooling fan replacement instructions. The cooling fan cannot operate properly when installed incorrectly and could seriously damage the drive. To ensure maximum useful product life, replace all cooling fans when performing maintenance.*

Contact your Yaskawa representative or supplier to order replacement cooling fans as required.

Some drive models have multiple cooling fans.

For drives with multiple cooling fans, replace all the fans when performing maintenance to ensure maximum useful product life.

◆ Cooling Fan Replacement

The cooling fan is installed on the top of the drive. The cooling fan can easily be replaced without tools or removal of the drive or enclosure parts.

WARNING! *Electrical Shock Hazard. Do not connect or disconnect wiring while the power is on. Failure to comply can result in serious personal injury. Before servicing the drive, disconnect all power to the equipment. The internal capacitor remains charged even after the power supply is turned off. The charge indicator LED will extinguish when the DC bus voltage is below 50 Vdc. To prevent electric shock, wait at least one minute after all indicators are OFF and measure the DC bus voltage level to confirm safe level.*

CAUTION! *Burn Hazard. Do not touch a hot drive heatsink. Failure to comply could result in minor or moderate injury. Shut off the power to the drive when replacing the cooling fan. To prevent burns, wait at least 15 minutes and ensure the heatsink has cooled down.*

■ Removing the Cooling Fan

1. Depress the right and left sides of the fan cover tabs and pull upward. Remove the fan cover from the top of the drive. The following figure illustrates a drive with a single cooling fan.

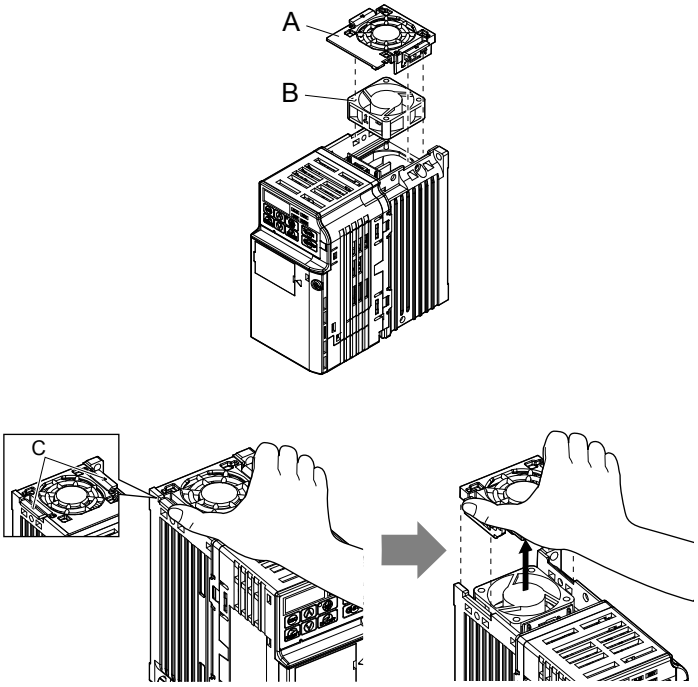

A – Fan cover
B – Cooling fan
C – Tab

Figure 7.1 Remove the Cooling Fan Cover

2. Remove the fan cable carefully, disconnect the pluggable connector and remove the fan.

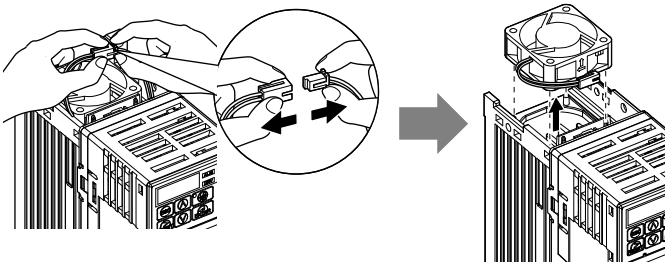

■ Installing the Cooling Fan

NOTICE: *Prevent Equipment Damage. Follow cooling fan replacement instructions. Improper cooling fan replacement could result in damage to equipment. When installing the replacement cooling fan into the drive, make sure the fan is facing upwards. To ensure maximum useful product life, replace all cooling fans when performing maintenance.*

1. Install the replacement cooling fan into the drive, ensuring the alignment pins line up, as shown in the figure below:

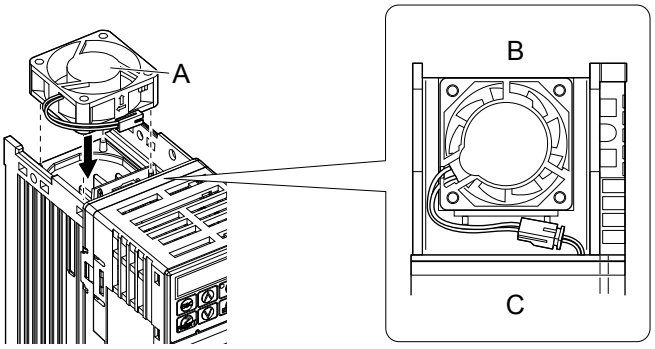

A – Label facing up
B – Back
C – Front

Figure 7.2 Cooling Fan Orientation

2. Ensure the connectors are properly connected and place the cable back into the recess of the drive.

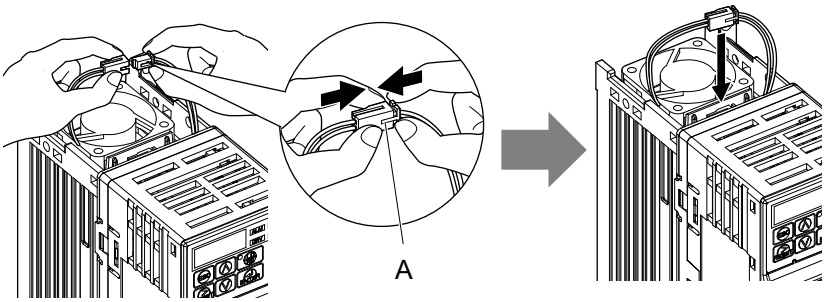

A – Push the connectors together so no space remains between them.

Figure 7.3 Connectors

Note: Ensure that the left and right tabs are locked back into place.

3. Align the left and right cover tabs to install the fan cover back on the top of the drive.

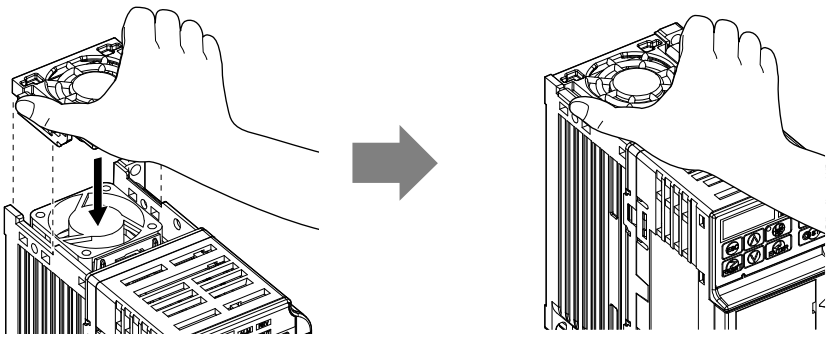

Figure 7.4 Installation

8

Peripheral Devices & Options

This chapter explains the installation of available peripheral devices and options for the drive.

8.1 SECTION SAFETY.....150
8.2 DRIVE OPTIONS AND PERIPHERAL DEVICES.....152
8.3 CONNECTING PERIPHERAL DEVICES.....153
8.4 INSTALLING PERIPHERAL DEVICES.....154
8.5 COMMUNICATION OPTIONS.....161

8.1 Section Safety

⚠ DANGER

Electrical Shock Hazard

Do not connect or disconnect wiring while the power is on.

Failure to comply will result in death or serious injury.

Disconnect all power to the drive, wait at least one minute after all indicators are off, measure the DC bus voltage to confirm safe level, and check for unsafe voltages before servicing to prevent electric shock. The internal capacitor remains charged even after the power supply is turned off. The charge indicator LED will extinguish when the DC bus voltage is below 50 Vdc.

⚠ WARNING

Electrical Shock Hazard

Do not operate equipment with covers removed.

Failure to comply could result in death or serious injury.

The diagrams in this section may show drives without covers or safety shields to show details. Be sure to reinstall covers or shields before operating the drives and run the drives according to the instructions described in this manual.

Do not remove covers or touch circuit boards while the power is on.

Failure to comply could result in death or serious injury.

⚠ WARNING

Do not touch any terminals before the capacitors have fully discharged.

Failure to comply could result in death or serious injury.

Before wiring terminals, disconnect all power to the equipment. The internal capacitor remains charged even after the power supply is turned off. The charge indicator LED will extinguish when the DC bus voltage is below 50 Vdc. To prevent electric shock, wait at least one minute after all indicators are off and measure the DC bus voltage level to confirm safe level.

Do not allow unqualified personnel to perform work on the drive.

Failure to comply could result in death or serious injury.

Installation, maintenance, inspection and servicing must be performed only by authorized personnel familiar with installation, adjustment and maintenance of AC drives.

Do not perform work on the drive while wearing loose clothing, jewelry or without eye protection.

Failure to comply could result in death or serious injury.

Remove all metal objects such as watches and rings, secure loose clothing and wear eye protection before beginning work on the drive.

Always ground the motor-side grounding terminal.

Improper equipment grounding could result in death or serious injury by contacting the motor case.

⚠ WARNING

Do not change wiring or remove option unit while power is running through the drive.

Failure to comply could result in death or serious injury.

Disconnect all power to the drive and check for unsafe voltages before servicing.

Tighten all terminal screws to the specified tightening torque.

Loose electrical connections could result in death or serious injury by fire due to overheating of electrical connections.

NOTICE

Observe proper electrostatic discharge procedures (ESD) when handling the drive and circuit boards.
Failure to comply may result in ESD damage to the drive circuitry.
Never connect or disconnect the motor from the drive while the drive is outputting voltage.
Improper equipment sequencing could result in damage to the drive.

8.2 Drive Options and Peripheral Devices

The following table of peripheral devices lists the names of the various devices/options available for Yaskawa drives. Contact Yaskawa or your Yaskawa agent to order these peripheral devices.

- **Peripheral Device Selection**: Refer to Yaskawa catalog for selection and part numbers.
- **Peripheral Device Installation**: Refer to option manual for option installation instructions.

Table 8.1 Available Peripheral Devices

Option	Model Number	Description
Power Options		
DC Reactor	—	DC reactor to improve power factor
AC Reactor	—	AC reactor to improve power factor
Braking Resistor	ERF-150WJ Series	3% ED, 150 W braking resistor
Interface Options		
Remote LED Operator	JVOP-182	Remote operator with LED display and copy function; Cable length max. 3 m
USB/Copy Unit	JVOP-181	Allows the user to copy and verify parameter settings between drives. Can also be used as adapter to connect the drive to a PC USB port Note: SI-232/JC option is required
RS-232C Serial Communication Interface	SI-232/JC	RS232C communications interface to connect the drive to a PC or the optional copy unit
Remote Operator Interface	SI-232/J	RS232C communications interface for usage with the external LED operator JVOP-182
Potentiometer Option	AI-V3/J	Potentiometer option for setting the frequency reference directly at the drive
Mechanical Options		
Heatsink External Mounting Attachment	EZZ020568□	Installation kit for mounting the drive with the heatsink outside of the panel (side-by-side mounting possible)
DIN Rail Attachment	EZZ08122□	Installation kit for mounting the drive on a DIN rail
NEMA Type 1 Kit	EZZ020564□	Parts to make the drive conform to NEMA Type 1 enclosure
Others		
Drive Wizard Plus	—	PC tool for drive setup and parameter management
Communication Options		
RS-422/485 Serial Communications Interface	SI-485/J	Interface for RS-422/485 communications using the MEMOBUS/Modbus RTU protocol

8.3 Connecting Peripheral Devices

Figure 8.1 illustrates how the drive and motor connect together with various peripheral devices.

- Refer to peripheral device option manual for detailed installation instructions.

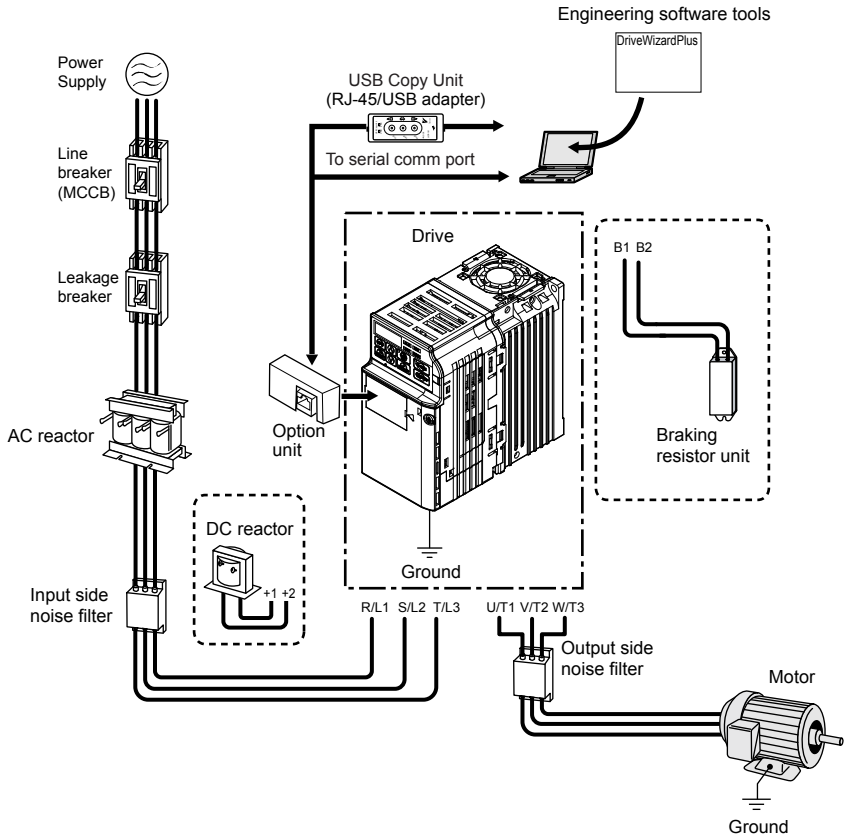

Figure 8.1 Connecting Peripheral Devices

8.4 Installing Peripheral Devices

This section describes the proper steps and precautions to take when installing or connecting various peripheral devices to the drive.

- Refer to peripheral device manual for detailed installation instructions.

NOTICE: *Use a class 2 power supply (UL standard) when connecting to the control terminals. Improper application of peripheral devices could result in drive performance degradation due to improper power supply.*

◆ Installing a Molded Case Circuit Breaker (MCCB)

Install a MCCB for line protection between the power supply and the main circuit power supply input terminals R/L1, S/L2 and T/L3. This protects the main circuit and devices wired to the main circuit while also providing overload protection.

Consider the following when selecting and installing an MCCB:

- The capacity of the MCCB should be 1.5 to 2 times the rated output current of the drive. Use an MCCB to keep the drive from faulting out instead of using overheat protection (150% for one minute at the rated output current).
- If several drives are connected to one MCCB or an MCCB is shared with other equipment, use a sequence that shuts the power OFF when errors are output by using magnetic contactor (MC) as shown in the following figure.

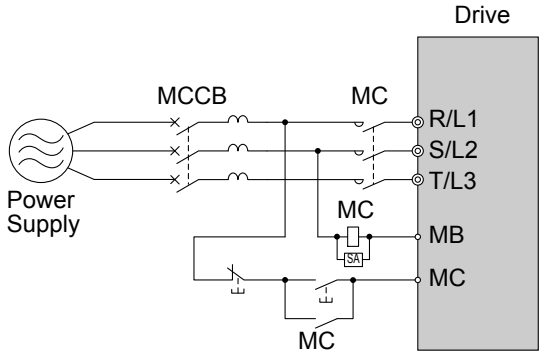

Figure 8.2 Connecting a MCCB

WARNING! *Electrical Shock Hazard. Disconnect the MCCB and MC before wiring terminals. Failure to comply may result in serious injury or death.*

◆ Installing a Leakage Breaker

Drive outputs generate high-frequency leakage current as a result of high-speed switching. Install a Ground Fault Circuit Interrupter (GFCI) on the input side of the drive to switch off potentially harmful leakage current.

Factors in determining leakage current:

- Size of the AC drive
- AC drive carrier frequency
- Motor cable type and length
- EMI/RFI filter

In order to safely protect the drive system, select a breaker that senses all types of current (AC and DC) and high frequency currents.

Note: Choose a GFCI designed specifically for an AC drive. The operation time should be at least 0.1 second with sensitivity amperage of at least 200 mA per drive. The output waveform of the drive may cause the leakage current to increase. This may, in turn, cause the leakage breaker to malfunction. Take the following steps to correct the problem:
- Increase the sensitivity amperage.
- Lower the carrier frequency.

◆ Installing a Magnetic Contactor

■ Disconnecting the Power Supply

The drive should be shut off in the case of a fault in external equipment such as braking resistors through use of a Magnetic Contactor (MC).

NOTICE: *Install a MC on the input side of the drive when the drive should not automatically restart after power loss. To get the full performance life out of the electrolytic capacitors and circuit relays, refrain from switching the MC more than once every 30 minutes. Frequent use can damage the drive. Use the drive to stop and start the motor.*

■ Protecting the Braking Resistor or Braking Resistor Unit

Use an MC on the input side of the drive to protect a braking resistor or braking resistor unit from overheat or fire.

WARNING! *Fire Hazard. When using a braking unit, use a thermal relay on the braking resistors and configure a fault contact output for the braking resistor unit to disconnect drive main power via an input contactor. Inadequate braking circuit protection could result in death or serious injury by fire from overheating resistors.*

◆ Connecting an AC or DC Reactor

AC and DC reactors suppress surges in current and improve the power factor on the input side of the drive.

Use a DC reactor or AC reactor or both:

- To suppress harmonic current or improve the power factor of the power supply.
- When using a phase advancing capacitor switch.
- With a large capacity power supply transformer (over 600 kVA).

Note: Use an AC or DC reactor when also connecting a thyristor converter (such as a DC drive) to the same power supply system, regardless of the conditions of the power supply.

■ Connecting an AC Reactor

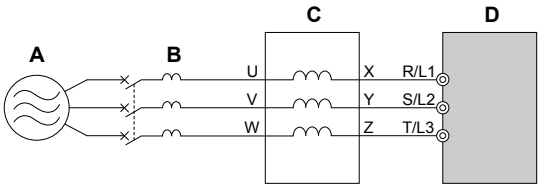

A – Power supply
B – MCCB
C – AC reactor
D – Drive

Figure 8.3 Connecting an AC Reactor

■ Connecting a DC Reactor

Ensure the jumper between terminals +1 and +2 (terminals are jumpered for shipment) is removed when connecting a DC reactor. The jumper must be installed if no DC reactor is used. ***Refer to Connecting a DC Reactor on page 155*** for an example of DC reactor wiring.

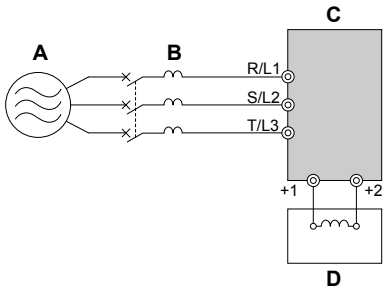

A – Power supply
B – MCCB
C – Drive
D – DC reactor

Figure 8.4 Connecting a DC Reactor

◆ Connecting a Surge Protector

A surge protector suppresses surge voltage generated from switching an inductive load near the drive. Inductive loads include magnetic contactors, relays, valves, solenoids and brakes. Always use a surge protector or diode when operating with an inductive load.

Note: Never connect a surge protector to the drive output.

◆ Connecting a Noise Filter

■ Input-Side Noise Filter

Drive outputs generate noise as a result of high-speed switching. This noise flows from inside the drive back toward the power supply, possibly affecting other equipment. Installing a noise filter to the input side of the drive can reduce the amount of noise flowing back into the power supply. This also prevents noise from entering the drive from the power supply.

- Use a noise filter specifically designed for AC drives.
- Install the noise filter as close as possible to the drive.

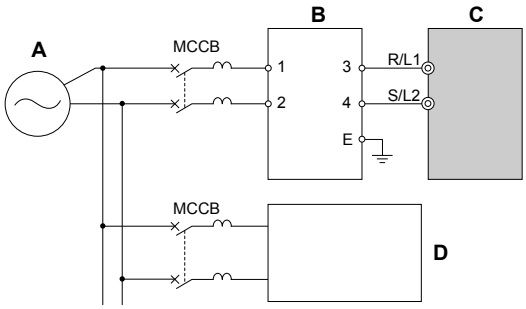

A – Power supply
B – Input-side noise filter
C – Drive
D – Other control device

Figure 8.5 Input-Side Noise Filter (Single-Phase 200 V)

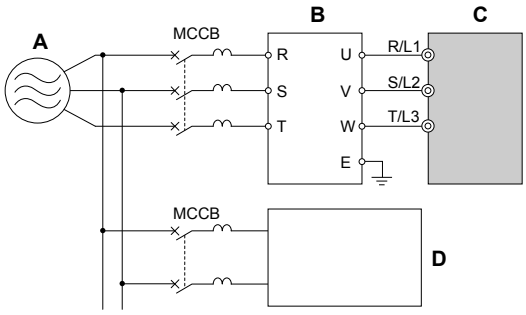

A – Power supply
B – Input-side noise filter
C – Drive
D – Other control device

Figure 8.6 Input-Side Noise Filter (Three-Phase 200/400 V)

Refer to EMC Filter Installation on page 215 for details about EMC filter selection and installation in order to make the drive compliant with European standards EN61800-3 and the EMC guidelines.

■ Output-Side Noise Filter

A noise filter on the output side of the drive reduces inductive noise and radiated noise. ***Figure 8.7*** illustrates an example of output-side noise filter wiring.

NOTICE: *Do not connect phase-advancing capacitors or LC/RC noise filters to the output circuits. Improper application of noise filters could result in damage to the drive.*

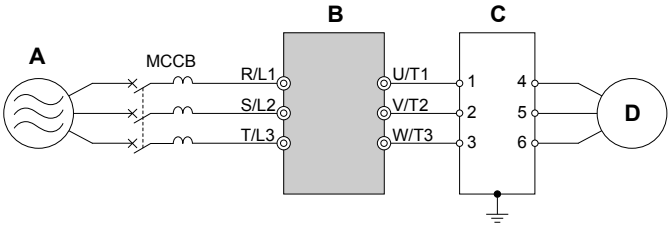

A – Power supply
B – Drive
C – Output-side noise filter
D – Motor

Figure 8.7 Output-Side Noise Filter

- **Radiated Noise:** Electromagnetic waves radiated from the drive and cables create noise throughout the radio bandwidth that can affect devices.
- **Induced Noise:** Noise generated by electromagnetic induction can affect the signal line and may cause the controller to malfunction.

Preventing Induced Noise

Use a noise filter on the output side or use shielded cables. Lay the cables at least 30 cm away from the signal line to prevent induced noise.

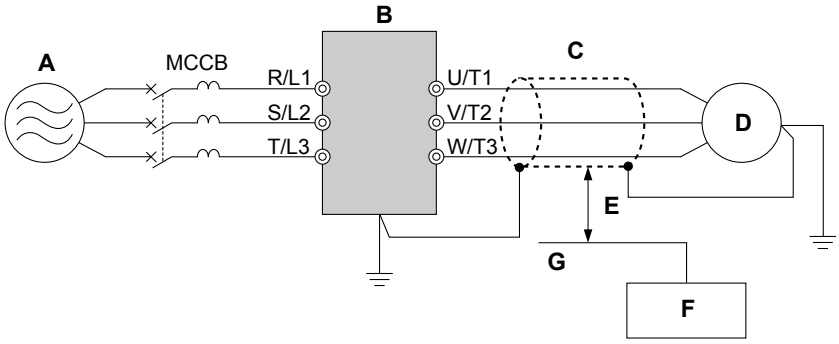

A – Power supply
B – Drive
C – Shielded motor cable
D – Motor
E – Separate at least 30 cm
F – Controller
G – Signal line

Figure 8.8 Preventing Induced Noise

Reducing Radiated/Radio Frequency Noise

The drive, input lines, and output lines generate radio frequency noise. Use noise filters on input and output sides and install the drive in a metal enclosure panel to reduce radio frequency noise.

Note: The cable running between the drive and motor should be as short as possible.

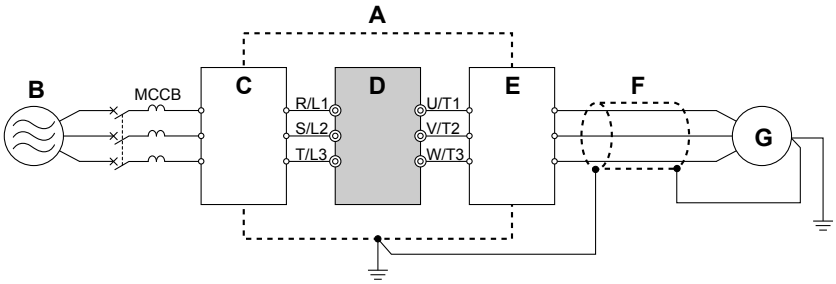

A – Metal enclosure
B – Power supply
C – Noise filter
D – Drive
E – Noise filter
F – Shielded motor cable
G – Motor

Figure 8.9 Reducing Radio Frequency Noise

◆ Installing Fuses on the Input Side

Always install input fuses. *Refer to Standards Compliance on page 211* for details on input fuse selection.

◆ Installing a Motor Thermal Overload (oL) Relay on the Drive Output

Motor thermal overload relays protect the motor by disconnecting power lines to the motor due to a motor overload condition.

Install a motor thermal overload relay between the drive and motor:

- When operating multiple motors on a single AC drive.
- When using a power line bypass to operate the motor directly from the power line.

It is not necessary to install a motor thermal overload relay when operating a single motor from a single AC drive. The AC drive has UL recognized electronic motor overload protection built into the drive software.

Note: Disable the motor protection function (L1-0 1 = “0”) when using an external motor thermal overload relay. The relay should shut off main power on the input side of the main circuit when triggered.

■ General Precautions when Using Thermal Overload Relays

The following application precautions should be considered when using motor thermal overload relays on the output of AC drives in order to prevent nuisance trips or overheat of the motor at low speeds:

- Low speed motor operation
- Use of multiple motors on a single AC drive
- Motor cable length
- Nuisance tripping resulting from high AC drive carrier frequency

Low Speed Operation and Motor Thermal oL Relays

Generally, thermal relays are applied on general-purpose motors. When general-purpose motors are driven by AC drives, the motor current is approximately 5 ~ 10% greater than if driven by the commercial power supply. In addition, the cooling capacity of a motor with a shaft-driven fan decreases when operating at low speeds. Even if the load current is within the motor rated value, motor overheating may occur. A thermal relay cannot effectively protect the motor due to the reduction of cooling at low speeds. For this reason, apply the UL recognized electronic thermal overload protection function built into the drive whenever possible.

UL recognized electronic thermal overload function of the drive: Speed-dependent heat characteristics are simulated using data from standard motors and force-ventilated motors. The motor is protected from overload using this function.

Using One Drive with Multiple Motors

Turn off the electronic thermal overload function. Please refer to the appropriate product instruction manual to determine which parameter disables this function.

The UL recognized electronic thermal overload function of the drive cannot be applied when using multiple motors on one drive.

Long Motor Cables

When long motor cables and high carrier frequency are used, nuisance tripping of the thermal relay may occur due to increased leakage current. Therefore, reduce the carrier frequency or increase the tripping level of the thermal overload relay.

Nuisance Tripping Resulting from High AC Drive Carrier Frequency

Current waveforms generated by high carrier frequency PWM drives tend to create additional temperature rise in overload relays. Therefore, it may be necessary to increase the trip level setting when encountering nuisance triggering of the relay.

WARNING! *Fire Hazard. Confirm an actual motor overload condition is not present prior to increasing the thermal oL trip setting. Check local electrical codes before making adjustments to motor thermal overload settings.*

◆ NEMA Type 1 Kit

WARNING! *Fire Hazard. Provide sufficient cooling when installing the drive inside an enclosed panel or cabinet. Failure to comply could result in overheating and fire. When multiple drives are placed inside the same enclosure panel, install proper cooling to ensure air entering the enclosure does not exceed 40 °C.*

The optional NEMA Type 1 kit can be installed to raise the enclosure protection level of an IP20/Open-Chassis drive to NEMA Type 1. Drives with a NEMA Type 1 kit cannot be installed using side-by-side mounting unless the top cover is removed. The drive does not retain NEMA Type 1 integrity with the top cover removed. ***Refer to Installation Orientation and Spacing on page 27*** for installation instructions.

■ Installation Environment

Table 8.2 Installation Environment

Environment	Conditions
Ambient Temperature	-10 °C to +40 °C (NEMA Type 1/wall-mounted enclosure) Drive reliability improves in environments without wide temperature fluctuations. When using an enclosure panel, install a cooling fan or air conditioner in the area to ensure that the air temperature inside the enclosure does not exceed the specified levels. Do not allow ice to develop on the drive.
Refer to Installation Environment on page 26 for all other installation environment specifications.	

■ Exterior and Mounting Dimensions for NEMA Type 1 Kit

The following table matches each drive model with its appropriate drawing.

Table 8.3 Drive Models and Types

Protective Design	Drive Model CIMR-J□			Page
	Single-Phase 200 V Class	Three-Phase 200 V Class	Three-Phase 400 V Class	
NEMA Type 1	B□0001F B□0002F B□0003F	2□0001F 2□0002F 2□0004F	–	*159*
	B□0006F B□0010F	2□0006F 2□0010F 2□0012F 2□0020F	4□0001F 4□0002F 4□0004F 4□0005F 4□0007F 4□0009F 4□0011F	*159*

Table 8.4 NEMA Type 1 (without an EMC filter)

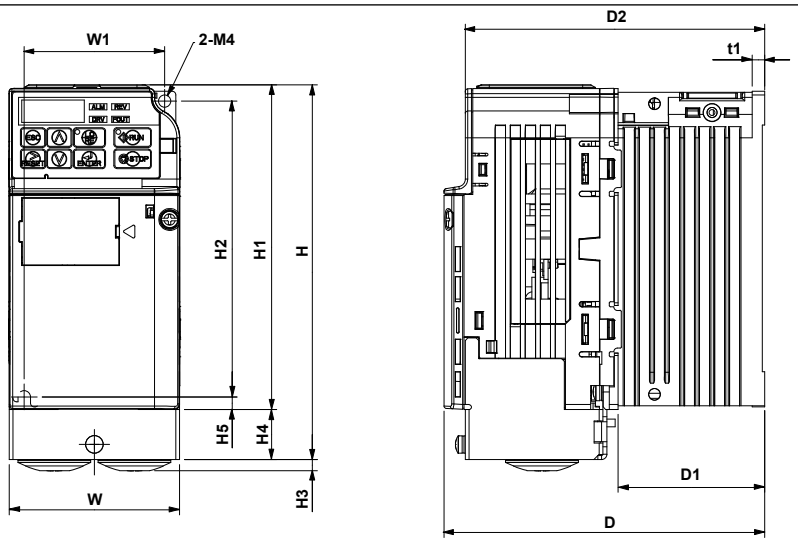

Voltage Class	Drive Model CIMR-J☐	Dimensions (mm)													
		W	H	D	W1	H1	H2	H3	H4	H5	H6	D1	D2	t1	Weight (kg)
Single-Phase 200 V Class		68	148	76	56	128	118	4.4	20	5	1.5	6.5	67.5	3	0.8
	BA0002F	68	148	76	56	128	118	4.4	20	5	1.5	6.5	67.5	3	0.8
	BA0003F	68	148	118	56	128	118	4.4	20	5	1.5	38.5	109.5	5	1.2
Three-Phase 200 V Class	2A0001F	68	148	76	56	128	118	4.4	20	5	1.5	6.5	67.5	3	0.8
	2A0002F	68	148	76	56	128	118	4.4	20	5	1.5	6.5	67.5	3	0.8
	2A0004F	68	148	108	56	128	118	4.4	20	5	1.5	38.5	99.5	5	1.1
	2A0006F	68	148	128	56	128	118	4.4	20	5	1.5	58.5	119.5	5	1.3

Table 8.5 NEMA Type 1 (without an EMC filter)

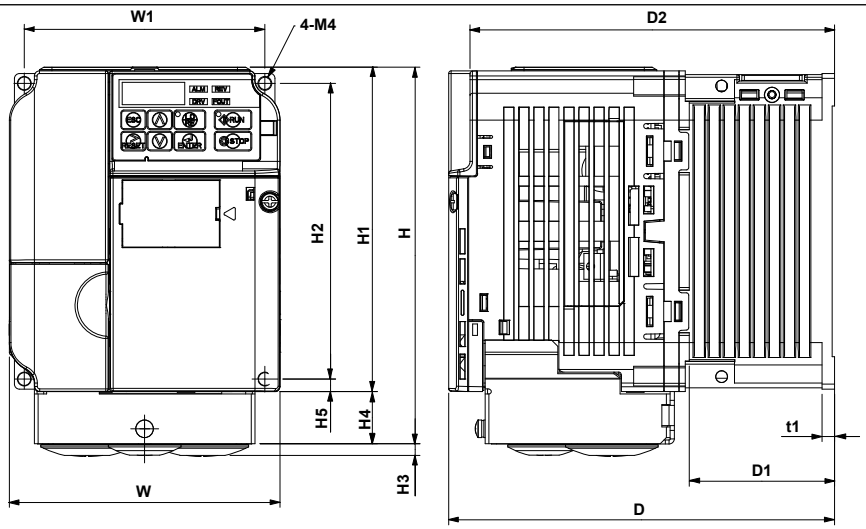

Voltage Class	Drive Model CIMR-J☐	Dimensions (mm)													
		W	H	D	W1	H1	H2	H3	H4	H5	H6	D1	D2	t1	Weight (kg)
Single-Phase 200 V Class	BA0006F	108	148.9	137.5	96	128	118	4.4	20.9	5	1.5	58	129	5	1.9
	BA0010F	108	148.9	154	96	128	118	4.5	20.9	5	1.5	58	145.5	5	2.0
Three-Phase 200 V Class	2A0010F	108	148.9	129	96	128	118	4.4	20.9	5	1.5	58	120.5	5	1.9
	2A0012F	108	148.9	137.5	96	128	118	4.4	20.9	5	1.5	58	129	5	1.9
	2A0020F	108	148.9	143	128	128	118	4.5	20.9	5	5	65	134.5	5	2.6
Three-Phase 400 V Class	4A0001F	108	148.9	81	96	128	118	4.4	20.9	5	1.5	10	72.5	5	1.2
	4A0002F	108	148.9	99	96	128	118	4.4	20.9	5	1.5	28	90.5	5	1.4
	4A0004F	108	148.9	137.5	96	128	118	4.4	20.9	5	1.5	58	129	5	1.9
	4A0005F	108	148.9	154	96	128	118	4.5	20.9	5	1.5	58	145.5	5	1.9
	4A0007F	108	148.9	154	96	128	118	4.5	20.9	5	1.5	58	145.5	5	1.9
	4A0009F	108	148.9	154	96	128	118	4.5	20.9	5	1.5	58	145..5	5	1.9
	4A0011F	108	148.9	143	128	128	118	4.5	20.9	5	5	65	134.5	5	2.6

■ Removing the Protective Covers on a NEMA Type 1 Design

1. Loosen the screw on the front cover to remove the front cover.

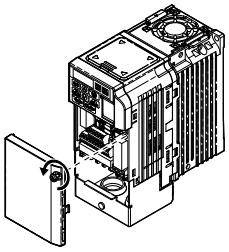

Figure 8.10 Remove the Front Cover on a NEMA Type 1 Drive

2. Loosen the screw on the terminal cover (*Figure 8.11*, **B**) to remove the terminal cover and expose the conduit bracket (*Figure 8.11*, **A**).

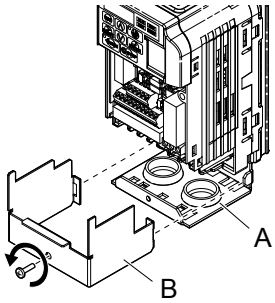

Figure 8.11 Remove the Terminal Cover on a NEMA Type 1 Drive

3. Loosen two screws attaching the conduit bracket (*Figure 8.12*, ***A***) to remove.

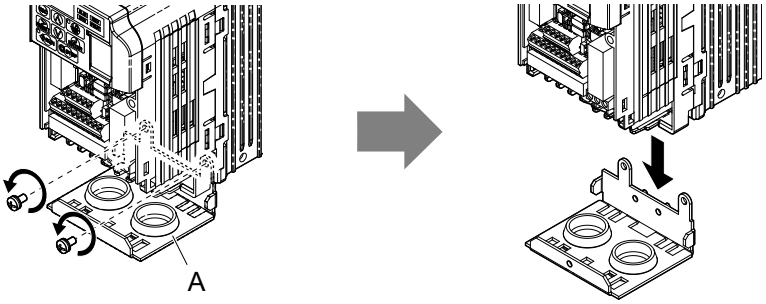

Figure 8.12 Remove the Conduit Bracket on a NEMA Type 1 Drive

■ Reattaching the Protective Covers

Pass power wiring and control signal wiring through the exit holes on the bottom of the conduit bracket of the drive. Place power wiring and control signal wiring in separate conduits. Properly connect all wiring after installing the drive and connecting other devices. Reattach all protective covers when wiring is complete.

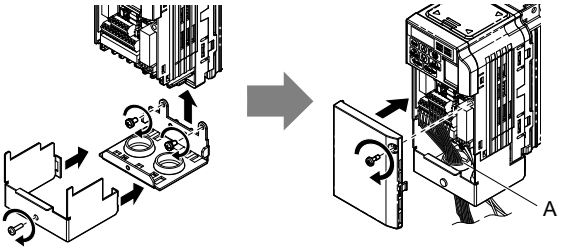

A – Pass power wiring and control signal wiring through different exit holes at the bottom of the drive.

Figure 8.13 Reattach the Protective Covers and Conduit Bracket on a NEMA Type 1 Drive

8.5 Communication Options

Table 8.6 gives detailed information about the available options that allow Yaskawa drives to connect to communication networks. A host controller can control and monitor the drive, read and change parameters by using a communication option. Contact Yaskawa or your Yaskawa agent to order options.

- **Option Selection**: Refer to Yaskawa catalog for more details on option card selection and part numbers.
- **Option Installation**: Refer to option unit manual for option unit installation instructions.

Table 8.6 Available Communication Option

Option	Model	Function
RS-422/485 Serial Communications Interface	SI-485/J	Interface for RS-422/485 communications using the MEMOBUS/Modbus RTU protocol

This Page Intentionally Blank

Appendix: A

Specifications

A.1 HEAVY DUTY AND NORMAL DUTY RATINGS.....164
A.2 SINGLE/THREE-PHASE 200 V CLASS DRIVE.....165
A.3 THREE-PHASE 400 V CLASS DRIVES.....166
A.4 DRIVE SPECIFICATIONS.....167
A.5 DRIVE WATT LOSS DATA.....169
A.6 DRIVE DERATING DATA.....170

A.1 Heavy Duty and Normal Duty Ratings

The capacity of the drive is based on two types of load characteristics: Heavy Duty (HD) and Normal Duty (ND).

Refer to Selecting the Appropriate Load Rating on page 164 for the differences between HD and ND. Specifications for capacity ratings are listed on the following pages.

Table A.1 Selecting the Appropriate Load Rating

Setting Parameter C6-01	Rated Output Current	Overload Tolerance	Default Carrier Frequency
0: Heavy Duty (default)	HD Rating varies by model <1>	150% rated output current for 60 s	8/10 kHz varies by model
1: Normal Duty	ND Rating varies by model <1>	120% rated output current for 60 s varies by model	2 kHz, Swing PWM

<1> The following pages list information on rating changes based on drive model.

TERMS

- **HD and ND**: HD refers to applications requiring constant torque output, while ND refers to applications with variable torque needs. The drive allows the user to select HD or ND torque depending on the application. Fans, pumps, and blowers should use ND (C6-01 = “1”), and other applications generally use HD (C6-01 = “0”).
- **Swing PWM**: Swing PWM equivalent to a 2 kHz audible noise. This function turns the motor noise into a less obtrusive white noise.

Note: Differences between HD ratings and ND ratings for the drive include rated input and output current, overload capacity, carrier frequency, and current limit. The default setting is for HD (C6-01 = 0).

A.2 Single/Three-Phase 200 V Class Drive

Table A.2 Power Ratings

Item				Specification						
Three-Phase: CIMR-J□2A				0001	0002	0004	0006	0010	0012	0020
Single-Phase: CIMR-J□BA <1>				0001	0002	0003	0006	0010	-	-
Maximum Motor Size Allowed (kW) <2>			HD Rating	0.1	0.2	0.4	0.75	1.5	2.2	4.0
			ND Rating	0.2	0.4	0.75	1.1	2.2	3.0	5.5
Input	Input Current (A) <3>	Three-Phase	HD Rating	0.7	1.5	2.9	5.8	7.5	11.0	18.9
			ND Rating	1.1	1.9	3.9	7.3	10.8	13.9	24.0
		Single-Phase	HD Rating	1.4	2.8	5.5	11.0	14.1	-	-
			ND Rating	2.0	3.6	7.3	13.8	20.2	-	-
Output	Rated Output Capacity (kVA) <4>		HD Rating	0.3	0.6	1.1	1.9	3.0	4.2	6.7
			ND Rating	0.5	0.7	1.3	2.3	3.7	4.6	7.5
	Output Current (A)		HD Rating	0.8 <6>	1.6 <6>	3.0 <6>	5.0 <6>	8.0 <7>	11.0 <7>	17.5 <7>
			ND Rating <5>	1.2	1.9	3.5(3.3)	6.0	9.6	12.0	19.6
	Overload Tolerance			ND Rating: 120% of rated output current for 1 minute HD Rating: 150% of rated output current for 1 minute (Derating may be required for applications that start and stop frequently)						
	Carrier Frequency			2 kHz (user-set, 2 to 15 kHz)						
	Max Output Voltage (V)			Three-phase 200 to 240 V (proportional to input voltage)						
	Max Output Frequency (Hz)			400 Hz (user-adjustable)						
Power Supply	Rated Voltage Rated Frequency			Three-phase power: Three-phase 200 to 240 V 50/60 Hz Single-phase power: 200 to 240 V 50/60 Hz						
	Allowable Voltage Fluctuation			-15 to 10%						
	Allowable Frequency Fluctuation			±5%						
Harmonic Corrective Actions		DC Reactor		Optional						

<1> Drives with a single-phase power supply input output three-phase power, and cannot run a single-phase motor.
<2> The motor capacity (kW) refers to a Yaskawa 4-pole motor. The rated output current of the drive output amps should be equal to or greater than the motor rated current.
<3> Input current rating varies depending on the power supply transformer, input reactor, wiring connections, and power supply impedance.
<4> Rated motor capacity is calculated with a rated output voltage of 220 V.
<5> Carrier frequency is set to Swing PWM. Current derating is required in order to raise the carrier frequency.
<6> Carrier frequency is set to 10 kHz. Current derating is required in order to raise the carrier frequency.
<7> Carrier frequency is set to 8 kHz. Current derating is required in order to raise the carrier frequency.

Note: Differences between Heavy Duty (HD) ratings and Normal Duty (ND) ratings for the drive include rated input and output current, overload capacity, carrier frequency and current limit. Set parameter C6-01 to “0” (default) for HD or “1” for ND.

A.3 Three-Phase 400 V Class Drives

Table A.3 Power Ratings

Item			Specification						
CIMR-J□4A			0001	0002	0004	0005	0007	0009	0011
Maximum Applicable Motor Capacity (kW) <1>		HD Rating	0.2	0.4	0.75	1.5	2.2	3.0	4.0
		ND Rating	0.4	0.75	1.5	2.2	3.0	3.7	5.5
Input	Input Current (A) <2>	HD Rating	1.2	1.8	3.2	4.4	6.0	8.2	10.4
		ND Rating	1.2	2.1	4.3	5.9	8.1	9.4	14.0
Output	Output Current (kVA) <3>	HD Rating <5>	0.9	1.4	2.6	3.7	4.2	5.5	7.0
		ND Rating <4>	0.9	1.6	3.1	4.1	5.3	6.7	8.5
	Output Current (A)	HD Rating <5>	1.2	1.8	3.4	4.8	5.5	7.2	9.2
		ND Rating <4>	1.2	2.1	4.1	5.4	6.9	8.8	11.1
	Overload Tolerance		ND Rating: 120% of rated output current for 60 s HD Rating: 150% of rated output current for 60 s (Derating may be required for applications that start and stop frequently)						
	Carrier Frequency		2 kHz (user-adjustable from 2 to 15 kHz)						
	Maximum Output Voltage (V)		Three-phase: 380 to 480 V (proportional to input voltage)						
	Maximum Output Frequency (Hz)		400 Hz (user-adjustable)						
Power Supply	Rated Voltage Rated Frequency		Three-phase: 380 to 480 V 50/60 Hz						
	Allowable Voltage Fluctuation		-15 to 10%						
	Allowable Frequency Fluctuation		±5%						
Harmonic Corrective Actions		DC Reactor	Optional						

<1> The motor capacity (kW) refers to a Yaskawa 4-pole motor. The rated output current of the drive output amps should be equal to or greater than the motor rated current.
<2> Input current rating varies depending on the power supply transformer, input reactor, wiring conditions, and power supply impedance.
<3> Rated motor capacity is calculated with a rated output voltage of 440 V.
<4> Carrier frequency is set to Swing PWM. Current derating is required in order to raise the carrier frequency.
<5> Carrier frequency is set to 8 kHz. Current derating is required in order to raise the carrier frequency.

Note: Differences between Heavy Duty (HD) ratings and Normal Duty (ND) ratings for the drive include rated input and output current, overload capacity, carrier frequency and current limit. Set parameter C6-01 to “0” (default) for HD or “1” for ND.

A.4 Drive Specifications

Note: For optimum performance life of the drive, install the drive in an environment that meets the environmental conditions.

Item		Specification
Control Characteristics	Control Method	V/f Control
	Frequency Control Range	0.01 to 400 Hz
	Frequency Accuracy	Digital input: within ±0.01% of the max output frequency (-10 to +50 °C) Analog input: within ±0.5% of the max output frequency (25 °C ±10 °C)
	Frequency Setting Resolution	Digital inputs: 0.01 Hz Analog inputs: 1/1000 of maximum output frequency
	Output Frequency Calculation Resolution	$1/2^{20}$ x Maximum output frequency (E1–04)
	Frequency Setting Signal	Main frequency reference: 0 to +10 Vdc (20 kΩ), 4 to 20 mA (250 Ω), 0 to 20 mA (250 Ω)
	Starting Torque	150%/3 Hz
	Speed Control Range	1: 20~40
	Accel/Decel Time	0.00 to 6000.0 s (allows four separate settings for accel and decel)
	Braking Torque	Instantaneous Average Decel Torque <1>: 0.1/0.2 kW: over 150%, 0.4/0.75 kW: over 100%, 1.5 kW: over 50%, 2.2 kW and above: over 20% Continuous Regen Torque: 20%, 125% with a Braking Resistor Unit <2>: (10% ED) 10 s with an internal braking resistor.
	V/f Characteristics	User-set, programmable.
	Functions	• Momentary Power Loss Ride-Thru • Speed Search • Multi-Step Speed (9 steps max) • Accel/Decel Time Switch • S-Curve Accel/Decel • 3-Wire Sequence • Cooling Fan ON/OFF • Slip Compensation • Torque Compensation • Jump Frequencies (reference dead band) • Frequency Reference Upper/Lower Limit • DC Injection Braking (start and stop) • Overexcitation Braking • Fault Reset
Protection Functions	Motor Protection	Motor overheat protection via output current sensor
	Overcurrent Protection	Drives stops when output exceeds 200% of the rated current (Heavy Duty)
	Overload Protection	A stop command will be entered after operating at 150% for 60 s (Heavy Duty) <3>
	Low Voltage Protection	Drive stops when DC bus voltage falls below the levels indicated: 190 V (3-phase 200 V), 160 V (single-phase 200 V), 380 V (3-phase 400 V), 350 V (3-phase 380 V)
	Momentary Power Loss Ride-Thru	Stops after 15 ms
	Heatsink Overheat Protection	Protected by thermistor
	Braking Resistor Overheat Protection	Overheat input signal for braking resistor (Optional ERF-type, 3% ED)
	Stall Prevention	During acceleration and during run: Separate settings for each type of stall prevention determine the current level at which stall prevention is triggered. During deceleration: Select, enable/disable.
	Cooling Fan Failure Protection	Circuit protection (“fan-lock” sensor)
	Ground Protection	Electronic circuit protection <4>
	DC Bus Charge LED	Remains lit until DC bus voltage falls below 50 V
Environment	Storage/Installation Area	Indoors
	Ambient Temperature	-10 to +50 °C (IP20/Open-Chassis)
	Humidity	95% RH or less with no condensation
	Storage Temperature	-20 to +60 °C allowed for short-term transport of the product
	Altitude	1000 m or less
	Shock, Impact	10 to 20 Hz: 9.8 m/s^2 20 to 55 Hz: 5.9 m/s^2
	Surrounding Area	Install the drive in an area free from: • oil mist and dust • metal shavings, oil, water or other foreign materials • radioactive materials • combustible materials • harmful gases and liquids • excessive vibration • chlorides • direct sunlight
	Orientation	Install the drive vertically to maintain maximum cooling effects
Protective Enclosure		IP20/Open-Chassis

Item	Specification
Cooling Method	CIMR-J☐BA0001 to 0006: self-cooled CIMR-J☐BA0010: cooling fan CIMR-J☐2A0001 to 0004: self-cooled CIMR-J☐2A0006 to 0020: cooling fan CIMR-J☐4A0001 to 0004: self-cooled CIMR-J☐4A0005 to 0011: cooling fan

<1> Instantaneous average deceleration torque refers to the torque required to decelerate the motor (uncoupled from the load) from the rated motor speed down to zero in the shortest time.

<2> Ensure that Stall Prevention Selection during Deceleration is disabled (L3-04 = 0) or set to 3 when using a braking resistor or the Braking Resistor Unit. The default setting for the stall prevention function will interfere with the braking resistor.

<3> Overload protection may be triggered when operating with 150% of the rated output current if the output frequency is less than 6 Hz.

<4> Ground protection cannot be provided under the following circumstances when a ground fault is likely in the motor windings during run: Low ground resistance for the motor cable and terminal block; low ground resistance for the motor cable and terminal block; or the drive is powered up from a ground short.

A.5 Drive Watt Loss Data

Table A.4 Watt Loss 200 V Class Single-Phase Models

Model Number CIMR-J□	Heavy Duty (Carrier Frequency 8/10 kHz) <1>				Normal Duty (Swing PWM equal 2 kHz)			
	Rated Amps (A)	Heatsink Loss (W)	Interior Unit Loss (W)	Total Loss (W)	Rated Amps (A)	Heatsink Loss (W)	Interior Unit Loss (W)	Total Loss (W)
BA0001	0.8	4.3	7.4	11.7	1.2	5.0	8.5	13.5
BA0002	1.6	7.9	8.9	16.7	1.9	7.6	9.7	17.3
BA0003	3.0	16.1	11.5	27.7	3.2	14.6	14.4	29.1
BA0006	5.0	33.7	16.8	50.5	6.0	30.1	19.4	49.5
BA0010	8.0	54.8	25.9	80.7	9.6	51.7	29.8	81.4

<1> 10 kHz for BA0001 to BA0006

Table A.5 Watt Loss 200 V Class Three-Phase Models

Model Number CIMR-J□	Heavy Duty (Carrier Frequency 8/10 kHz) <1>				Normal Duty (Swing PWM equal 2 kHz)			
	Rated Amps (A)	Heatsink Loss (W)	Interior Unit Loss (W)	Total Loss (W)	Rated Amps (A)	Heatsink Loss (W)	Interior Unit Loss (W)	Total Loss (W)
2A0001	0.8	4.3	7.3	11.6	1.2	5.0	8.0	13.0
2A0002	1.6	7.9	8.8	16.7	1.9	7.6	9.5	17.1
2A0004	3.0	16.2	11.5	27.7	3.5	15.8	13.6	29.4
2A0006	5.0	27.4	15.9	43.3	6.0	27.5	17.2	44.7
2A0010	8.0	54.8	23.8	78.6	9.6	51.7	25.8	77.5
2A0012	11.0	70.7	29.9	100.6	12.0	61.3	30.4	91.7
2A0020	17.5	110.5	43.3	153.8	19.6	98.7	46.3	145.0

<1> 10 kHz for 2A0001 to2A0006

Table A.6 Watt Loss 400 V Class Three-Phase Models

Model Number CIMR-J□	Heavy Duty (Carrier Frequency 8 kHz)				Normal Duty (Swing PWM equal 2 kHz)			
	Rated Amps (A)	Heatsink Loss (W)	Interior Unit Loss (W)	Total Loss (W)	Rated Amps (A)	Heatsink Loss (W)	Interior Unit Loss (W)	Total Loss (W)
4A0001	1.2	19.2	11.5	30.7	1.2	10.0	9.6	19.6
4A0002	1.8	28.9	14.8	43.7	2.1	18.5	13.9	32.4
4A0004	3.4	42.3	17.9	60.2	4.1	30.5	16.8	47.3
4A0005	4.8	70.7	26.2	96.9	5.4	44.5	21.8	66.3
4A0007	5.5	81.0	30.7	111.7	6.9	58.5	28.4	86.9
4A0009	7.2	84.6	32.9	117.5	8.8	63.7	31.4	95.1
4A0011	9.2	107.2	41.5	148.7	11.1	81.7	46.0	127.7

A.6 Drive Derating Data

The drive can be operated at above rated temperature, altitude and default carrier frequency by derating the drive capacity.

◆ Temperature Derating

As the ambient temperature for the drive is increased above the drive specification the drive should be derated. Additionally parameter L8-35 Installation Method Selection on page *170* should be set according to enclosure type and mounting method as illustrated in *Figure A.1* on page *170*.

■ Output Current Derating Due to Ambient Temperature

If the ambient temperature is above the drive specification or if drives are side-by-side mounted in a cabinet, the parameters L8-12 and L8-35 must be set according to the installation conditions. The output current is derated as shown in *Figure A.1*.

No.	Name	Description	Range	Def.
L8-12	Ambient Temperature Setting	Adjust the drive overload (oL2) protection level when the drive is installed in an environment that exceeds its ambient temperature rating.	-10 to 50	30 °C
L8-35	Installation Method Selection	0: Disabled (standard installation) 1: Side-by-Side installation 2: IP20/NEMA Type 1 3: Finless/Fin Outside installation	0 to 2	0

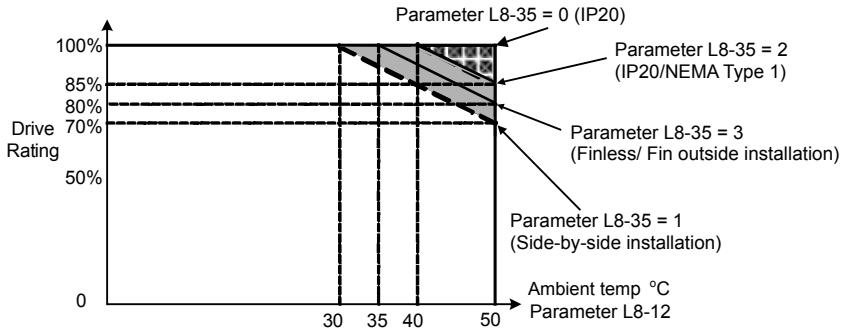

Figure A.1 Ambient Temperature and Installation Method Derating

Appendix: B

Parameter List

This appendix contains a full listing of all parameters and settings available in the drive.

B.1 PARAMETER GROUPS.....172
B.2 PARAMETER TABLE.....173
B.3 DEFAULTS BY DRIVE CAPACITY (O2-04) AND ND/HD (C6-01).....185

B.1 Parameter Groups

Parameter Group	Name	Page	Parameter Group	Name	Page
A1	Initialization	173	H5	Serial Communications Setup	179
b1	Sequence	173	L1	Motor Overload	179
b2	DC Injection Braking	173	L2	Power Loss Ride-Thru	180
C1	Acceleration/Deceleration Time	174	L3	Stall Prevention	180
C2	S-Curve Accel/Decel	174	L4	Reference Detection	180
C3	Motor Slip Compensation	174	L5	Fault Restart	180
C4	Motor Torque Compensation	174	L6	Overtorque Detection	181
C6	Carrier Frequency	174	L8	Hardware Protection	181
d1	Frequency Reference	175	n1	Hunting Prevention	182
d2	Reference Limits	175	n3	Overexcitation Braking	182
d3	Jump Frequencies	175	o1	Monitor Display Selection	182
d4	Frequency Reference Hold	176	o2	Operator Keypad Functions	182
E1	V/f Pattern	176	o3	Copy Function	183
E2	Motor Setup	176	o4	Maintenance Functions	183
H1	Digital Inputs	177	U1	Status Monitor	183
H2	Digital Outputs	178	U2	Fault History	184
H3	Analog Inputs	178	U4	Maintenance Monitor	184
H4	Analog Outputs	179			

B.2 Parameter Table

◆ A: Initialization Parameters

The A parameter group creates the operating environment for the drive. This includes the parameter Access Level, and Password.

No.	Name	Description	Range	Def.	Mode	Addr. Hex	Pg.
A1: Initialization Parameters Use A1 parameters to configure the basic environment for drive operation.							
A1-01 <22>	Access Level Selection	Selects which parameters are accessible via the digital operator. 0: Operation only 2: Advanced Access Level	0, 2	2	O	101	
A1-03	Initialize Parameters	Resets all parameters to factory default settings. (Initializes the drive then returns A1-03 to 0) 0: No Initialize 2220: 2-Wire Initialization 3330: 3-Wire Initialization	0 to 3330	0	O	103	70
			U2 monitors are not reset when performing initialization.				
A1-04	Password 1	When the value set into A1-04 does not match the value set into A1-05, parameters A1-01 and A1-03 cannot be changed.	0 to 9999	0	O	104	70
A1-05	Password 2		0 to 9999	0	O	105	70
			This parameter is hidden from view. To access A1-05, first display A1-04. Then press the STOP key while holding down the up arrow key. Parameter A1-05 will appear.				

<22> Parameter can be changed during run.

◆ b: Application

Application parameters configure the Run Command Source, DC Injection Braking, and other application-related settings.

No.	Name	Description	Range	Def.	Mode	Addr. Hex	Pg.
b1: Operation Mode Selection Use b1 parameters to configure the operation mode.							
b1-01	Frequency Reference Selection	Selects the frequency reference input source. 0: Operator - Digital preset speed d1-01 to d1-08 1: Terminals - Analog input terminal A1 2: MEMOBUS/Modbus communications (option) 3: Potentiometer (option)	0 to 3	1	S	180	72
b1-02	Run Command Selection	Selects the run command input source. 0: Operator - RUN and STOP keys on the digital operator 1: Digital input terminals 2: MEMOBUS/Modbus communications (option)	0 to 2	1	S	181	73
b1-03	Stopping Method Selection	Selects the stopping method when the run command is removed. 0: Ramp to Stop 1: Coast to Stop	0, 1	0	S	182	74
b1-04	Reverse Operation Selection	Permits or prohibits reverse operation. 0: Reverse enabled. 1: Reverse disabled.	0, 1	0	O	183	75
b1-07	LOCAL/REMOTE Run Selection	Determines the operation when the Run command source is switched from LOCAL to REMOTE or between REMOTE and MEMOBUS/Modbus communication. 0: External Run command has to be cycled at the new source to be activated. 1: External Run command at new source is accepted immediately.	0, 1	0	O	186	75
b1-08	Run Command Selection while in Programming Mode	0: Run command accepted only in the operation menu. 1: Run command accepted in all menus. 2: Prohibit entering Programming Mode during Run	0 to 2	0	O	187	75
b1-14	Phase Order Selection	Sets the phase order for drive output terminals U/T1, V/T2 and W/T3. 0 : Standard 1 : Switch phase order	0, 1	0	O	1C3	75
b1-17	Run Command at Power Up	Determines the operation when a Run command is active at power up of the drive. 0: Run command not issued, needs to be cycled 1: Run command issued, motor operation start	0, 1	0	O	1C6	76
b2: DC Injection Braking Use b2 parameters to configure DC Injection Braking operation							
b2-02	DC Injection Braking Current	Sets the DC Injection Braking current as a percentage of the drive rated current.	0 to 75	50%	O	18A	76

No.	Name	Description	Range	Def.	Mode	Addr. Hex	Pg.
b2-03	DC Injection Braking Time/DC Excitation Time at Start	Sets DC Injection Braking time at start. Disabled when set to 0.00 seconds.	0.00 to 10.00	0.00 s	O	18B	76
b2-04	DC Injection Braking Time at Stop	Sets DC Injection Braking time at stop. When b1-03 = 0, this parameter sets the amount of DC Injection time applied to the motor at the end of the decel ramp. Disabled when set to 0.00.	0.00 to 10.00	0.50 s	O	18C	76

◆ C: Tuning

C parameters are used to adjust the acceleration and deceleration times, S-curves, slip and torque compensation functions and carrier frequency selections.

No.	Name	Description	Range	Def.	Mode	Addr. Hex	Pg.
C1: Acceleration and Deceleration Times Use C1 parameters to configure motor acceleration and deceleration.							
C1-01 <22>	Acceleration Time 1	Sets the time to accelerate from 0 to maximum frequency.	0.0 to 6000.0	10.0 s	S	200	77
C1-02 <22>	Deceleration Time 1	Sets the time to decelerate from maximum frequency to 0.			S	201	77
C1-03 <22>	Acceleration Time 2	Sets the time to accelerate from 0 to maximum frequency when Accel/Decel times 2 are selected by a digital input.			O	202	77
C1-04 <22>	Deceleration Time 2	Sets the time to decelerate from maximum frequency to 0 when Accel/Decel times 2 are selected by a digital input.			O	203	77
C1-09	Fast-Stop Time	Sets the time to decelerate from maximum frequency to 0 for the multi-function input fast-stop function. **Note:** This parameter is also used by selecting "Fast-Stop" as a Stop Method when a fault is detected.			O	208	77
C2: S-Curve Characteristics Use C2 parameters to configure S-curve operation.							
C2-01	S-Curve Characteristic at Accel Start	The S-curve can be controlled in the four points shown below. 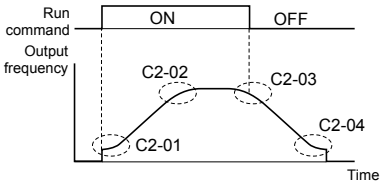 S-curve is used to further soften the starting and stopping ramp. The longer the S-curve time, the softer the starting and stopping ramp.	0.00 to 10.00	0.20 s	O	20B	78
C2-02	S-Curve Characteristic at Accel End		0.00 to 10.00	0.20 s	O	20C	78
C2-03	S-Curve Characteristic at Decel Start		0.00 to 10.00	0.20 s	O	20D	78
C2-04	S-Curve Characteristic at Decel End		0.00 to 10.00	0.00 s	O	20E	78
C3: Slip Compensation Use C3 parameters to configure the slip compensation function.							
C3-01 <22>	Slip Compensation Gain	Sets the slip compensation gain. Decides for what amount the output frequency is boosted in order to compensate the slip. **Note:** Adjustment is not normally required.	0.0 to 2.5	0.0	O	20F	78
C3-02	Slip Compensation Primary Delay Time	Adjusts the slip compensation function delay time. Decrease the setting when the slip compensation response is too slow, increase it when the speed is not stable.	0 to 10000	2000 ms	O	210	78
C4: Torque Compensation Use C4 parameters to configure Torque Compensation function.							
C4-01 <22>	Torque Compensation Gain	Sets the gain for the automatic torque (voltage) boost function and helps to produce better starting torque. Increase this setting when using a long motor cable or when the motor is significantly smaller than the drive capacity. Decrease this setting when motor oscillation occurs. Set the value so that the current at low speed does not exceeds the drive rated current.	0.00 to 2.50	1.00	O	215	78
C6: Carrier Frequency Use C6 parameters to configure the carrier frequency drive settings.							
C6-01	Normal/Heavy Duty Selection	Selects the load rating for the drive. 0: Heavy Duty (HD) for constant torque applications. 1: Normal Duty (ND) for variable torque applications. This setting affects the Rated output current and overload tolerance of the drive.	0, 1	0	S	223	79

No.	Name	Description	Range	Def.	Mode	Addr. Hex	Pg.
C6-02	Carrier Frequency Selection	Selects the carrier frequency 1 : 2.0 kHz 2 : 5.0 kHz 3 : 8.0 kHz 4 : 10.0 kHz 5 : 12.5 kHz 6 : 15.0 kHz 7 : Swing PWM 8 to E : No setting possible F : User defined (determined by C6-03 through C6-05)	1 to F	<57>	S	224	79
C6-03	Carrier Frequency Upper Limit	C6-03 and C6-04 set upper and lower limits for the carrier frequency. 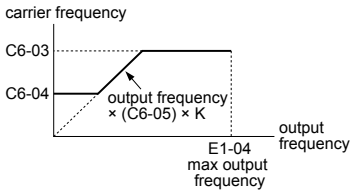 The coefficient K depends on C6-03: C6-03 ≥ 10.0 kHz: K = 3 10.0 kHz > C6-03 ≥ 5.0 kHz: K = 2 5.0 kHz > C6-03: K = 1 When C6-05 ≤ 6, C6-04 is disabled (makes the carrier frequency C6-03 value).	1.0 to 15.0	<8>	O	225	80
C6-04	Carrier Frequency Lower Limit		1.0 to 15.0	<8>	O	226	80
C6-05	Carrier Frequency Proportional Gain	Sets the relationship of output frequency to carrier frequency when C6-02 = F.	00 to 99	<8>	O	227	80

<8> Default setting value is dependent on parameter C6-02, Carrier Frequency Selection.
<22> Parameter can be changed during run.
<57> Default setting value is dependent on parameter o2-04, Drive Model Selection and C6-01, Drive Duty Selection.

◆ d: References

Reference parameters are used to set the various frequency reference values during operation.

No.	Name	Description	Range	Def.	Mode	Addr. Hex	Pg.
d1: Frequency Reference Use d1 parameters to configure the drive frequency reference.							
d1-01 <22>	Frequency Reference 1	Frequency reference	0.00 to 400.00 Hz <19>	0.00 Hz	S	280	82
d1-02 <22>	Frequency Reference 2	Frequency reference when digital input "Multi-Step Speed Reference 1" (H1-□□ = 3) is on.		0.00 Hz	S	281	82
d1-03 <22>	Frequency Reference 3	Frequency reference when digital input "Multi-Step Speed Reference 2" (H1-□□ = 4) is on.		0.00 Hz	S	282	82
d1-04 <22>	Frequency Reference 4	Frequency reference when digital inputs "Multi-Step Speed Reference 1, 2" (H1-□□ = 3 and 4) are on.		0.00 Hz	S	283	82
d1-05 <22>	Frequency Reference 5	Frequency reference when digital input "Multi-Step Speed Reference 3" (H1-□□ = 5) is on.		0.00 Hz	O	284	82
d1-06 <22>	Frequency Reference 6	Frequency reference when digital inputs "Multi-Step Speed Reference 1, 3 " (H1-□□ = 3 and 5) are on.		0.00 Hz	O	285	82
d1-07 <22>	Frequency Reference 7	Frequency reference when digital inputs "Multi-Step Speed Reference 2, 3" (H1-□□ = 4 and 5) are on.		0.00 Hz	O	286	82
d1-08 <22>	Frequency Reference 8	Frequency reference when multi-function input "Multi-Step speed reference 1, 2, 3" (H1-□□ = 3, 4, 5) are on.		0.00 Hz	O	287	82
d1-17 <22>	Jog Frequency Reference	Frequency reference when digital inputs "Jog Frequency Reference", "Forward Jog" or "Reverse Jog." are on.		6.00 Hz	S	292	82
d2: Frequency Upper and Lower Limits Use d2 parameters to configure the frequency reference limits.							
d2-01	Frequency Reference Upper Limit	Sets the frequency reference upper limit as a percentage of maximum output frequency (E1-04). Output speed is limited to this value even if the frequency reference is higher. This limit applies to all frequency reference sources.	0.0 to 110.0	100.0%	O	289	83
d2-02	Frequency Reference Lower Limit	Sets the frequency reference lower limit as a percentage of maximum output frequency (E1-04). Output speed is limited to this value even if the frequency reference is lower. This limit applies to all frequency reference sources.	0.0 to 110.0	0.0%	O	28A	83
d3: Jump Frequency Use d3 parameters to configure the drive Jump Frequency settings.							

No.	Name	Description	Range	Def.	Mode	Addr. Hex	Pg.
d3-01	Jump Frequency 1	d3-01 to d3-04 allow programming of three prohibited frequency reference points for eliminating problems with resonant vibration of the motor/machine. This feature does not eliminate the selected frequency values, but accelerates and decelerates the motor through the prohibited bandwidth. The parameters must be according to the rule d3-01 ≥ d3-02 .	0.0 to 400.0	0.0 Hz	O	294	84
d3-02	Jump Frequency 2			0.0 Hz	O	295	84
d3-04	Jump Frequency Width	This parameter sets the dead-band width around each selected prohibited frequency reference point. The bandwidth becomes the designated Jump frequency, plus or minus d3-04.	0.0 to 20.0	1.0 Hz	O	297	84
d4: Frequency Reference Hold Use d4 parameters to configure the drive frequency reference hold function.							
d4-01	Frequency Reference Hold Function Selection	Determines if the frequency reference or frequency reference bias is saved when the Run command is removed or the power goes off. 0: Disabled 1: Enabled This parameter is effective when the multi-function inputs “Accel/Decel Ramp Hold” or “Up/Down” commands are selected (H1-□□ = A or 10/11).	0, 1	0	O	298	84

<19> Range upper limit is dependent on parameters E1-04, Maximum Output Frequency, and d2-01, Frequency Reference Upper Limit.
<22> Parameter can be changed during run.

◆ E: Motor Parameters

E parameters set V/f characteristics and motor-related data.

No.	Name	Description	Range	Def.	Mode	Addr. Hex	Pg.
E1: V/f Pattern Characteristics Use E1 parameters to set V/f characteristics for the motor.							
E1-01 <24>	Input Voltage Setting	This parameter must be set to the power supply voltage. **WARNING!** Drive input voltage (not motor voltage) must be set in E1-01 for the protective features of the drive to function properly. failure to do so may result in equipment damage and/or death or personal injury.	155 to 255	200	S	300	86
E1-04	Max Output Frequency	To set linear V/f characteristics, set the same values for E1-07 and E1-09. In this case, the setting for E1-08 will be disregarded. Ensure that the four frequencies are set according to these rules: E1-04 ≥ E1-06> E1-07 ≥ E1-09 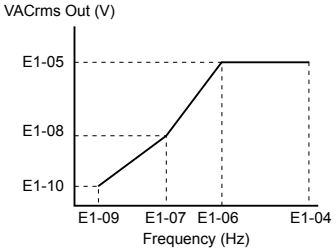 	40.0 to 400.0	50 Hz	S	303	86
E1-05 <24>	Max Output Voltage		0.0 to 255.0	200 V	S	304	86
E1-06	Base Frequency		0.0 to E1-04	50 Hz	O	305	86
E1-07	Mid Output Frequency		0.0 to E1-04	2.5 Hz	O	306	86
E1-08 <24>	Mid Output Frequency Voltage		0.0 to 255.0	16.0 V	O	307	86
E1-09	Minimum Output Freq.		0.0 to E1-04	1.3 Hz	S	308	86
E1-10 <24>	Minimum Output Freq. Voltage		0.0 to 255.0	12.0 V	O	309	86
E2: Motor Parameters Use E2 parameters to set motor-related data.							
E2-01	Motor Rated Current	Sets the motor nameplate full load current in amperes (A).	10 to 200% of drive rated current	<57>	S	30E	88
E2-02	Motor Rated Slip	Sets the motor rated slip in Hertz.	0.00 to 20.00	<57>	O	30F	88
E2-03	Motor No-Load Current	Sets the magnetizing current of the motor in Ampere.	0 to less than E2-01	<57>	O	310	88
E2-05	Motor Line-to-Line Resistance	Sets the phase-to-phase motor resistance in ohms.	0.000 to 65.000 <37>	<57>	O	312	88

<24> Values shown here are for 200 V class drives. Double the value when using a 400 V class drive.
<37> Setting range becomes 0.00 to 130.00 for drives 0.2 kW and smaller.
<57> Default setting value is dependent on parameter o2-04, Drive Model Selection and C6-01, Drive Duty Selection.

◆ H Parameters: Multi-Function Terminals

H parameters assign functions to the multi-function input and output terminals.

No.	Name	Description	Range	Def.	Mode	Addr. Hex	Pg.
H1: Multi-Function Digital Input H1 parameters to assign functions to the multi-function digital input terminals. Unused terminals should be set to "F".							
H1-01	Multi-Function Digital Input Terminal S1 Function Selection	Assigns a function to the multi-function digital inputs. Refer to H1 Multi-Function Digital Input Selections on page *177* for a description of setting values.	1 to 67	40	O	438	*90*
H1-02	Multi-Function Digital Input Terminal S2 Function Selection			41	O	439	*90*
H1-03	Multi-Function Digital Input Terminal S3 Function Selection		0 to 67	24	O	400	*90*
H1-04	Multi-Function Digital Input Terminal S4 Function Selection			14	O	401	*90*
H1-05	Multi-Function Digital Input Terminal S5 Function Selection			3 (0) *<18>*	O	402	*90*

<18> Parenthetical value is the default when parameter A1-03 = 3330 3-Wire Initialization.

H1 Multi-Function Digital Input Selections			
H1-□□ Setting	Function	Description	Page
0	3-Wire Sequence	Closed: Reverse rotation (only if the drive is set up for 3-Wire sequence)	*90*
1	LOCAL/REMOTE Selection	Open: REMOTE, Run and frequency reference source set in b1-01/02 Closed: LOCAL, LED operator is run and reference source	*91*
2	Serial Communication Reference Selection	Open: REMOTE, Run and frequency reference source set in b1-01/02 Closed: MEMOBUS/Modbus Communication	*91*
3	Multi-Step Speed Reference 1	Used to select Multi-Step Speeds set in d1-01 to d1-08	*91*
4	Multi-Step Speed Reference 2		*91*
5	Multi-Step Speed Reference 3		*91*
6	Jog Reference Selection	Open: Selected speed reference Closed: Jog Frequency reference (d1-17). Jog has priority over all other reference sources.	*91*
7	Accel/Decel Time 1	Used to switch between Accel/Decel Time 1 and 2	*91*
8	Baseblock Command (N.O.)	Open: Normal operation Closed: No drive output	*91*
9	Baseblock Command (N.C.)	Open: No drive output Closed: Normal operation	*91*
A	Accel/Decel Ramp Hold	Closed: The drive pauses during acceleration or deceleration and maintains the output frequency.	*92*
F	Not used	Select this setting when not using the terminal or when using the terminal in a pass-through mode.	*92*
10	Up Command	Open: Maintains the current frequency reference Closed: Increases or decreases the current frequency reference. Ensure that the increase and decrease commands are set in conjunction with one another.	*92*
11	Down Command		*92*
14	Fault Reset	Closed: Resets faults if the cause is cleared and the Run command is removed.	*93*
15	Fast-Stop (N.O.)	Closed: Decelerates at the Fast-Stop time C1-09. To restart the Fast-Stop input must be released and Run must be cycled.	*93*
17	Fast-stop (N.C.)	Open: Decelerates according to C1-09 (Fast-stop Time)	*93*
20 to 2F	External Fault	20: N.O., Always Detected, Ramp To Stop 21: N.C., Always Detected, Ramp To Stop 22: N.O., During Run, Ramp To Stop 23: N.C., During Run, Ramp To Stop 24: N.O., Always Detected, Coast To Stop 25: N.C., Always Detected, Coast To Stop 26: N.O., During Run, Coast To Stop 27: N.C., During Run, Coast To Stop 28: N.O., Always Detected, Fast-stop 29: N.C., Always Detected, Fast-stop 2A: N.O., During Run, Fast-stop 2B: N.C., During Run, Fast-stop 2C: N.O., Always Detected, Alarm Only (continue running) 2D: N.C., Always Detected, Alarm Only (continue running) 2E: N.O., During Run, Alarm Only (continue running) 2F: N.C., During Run, Alarm Only (continue running)	*94*
40	Forward Run Command (2-Wire sequence)	Open: Stop Closed: Forward run	*94*

H1 Multi-Function Digital Input Selections			
H1-□□ Setting	Function	Description	Page
41	Reverse Run Command (2-Wire sequence)	Open: Stop Closed: Reverse run	94
61	External Search Command 1	Closed: Activates Current Detection Speed Search from the max. output frequency (E1-04)	94
62	External Search Command 2	Closed: Activates Current Detection Speed Search from the frequency reference	94
67	Communications Test Mode	Tests the MEMOBUS/Modbus RS-422/485 interface.	95

No.	Name	Description	Range	Def.	Mode	Addr. Hex	Pg.
H2: Multi-Function Digital Output MA-MB-MC Use H2 parameters to assign functions to the multi-function digital output MA-MB-MC.							
H2-01	Terminal MA, MB and MC Function Selection (relay)	Refer to H2 Multi-Function Digital Output Settings on page 178 for a description of setting values.	0 to 13D	E	O	40B	95

H2 Multi-Function Digital Output Settings			
H2-01 Setting	Function	Description	Page
0	During Run	Closed: A Run command is active or voltage is output	95
1	Zero Speed	Closed: Output frequency is 0	95
2	Speed Agree 1	Closed: Output frequency equals the speed reference (plus or minus 2 Hz hysteresis)	96
4	Frequency Detection 1	Closed: Output frequency is less than or equal to the value in L4-01 with 2 Hz hysteresis	96
5	Frequency Detection 2	Closed: Output frequency is greater than the value in L4-01 with 2 Hz hysteresis	96
6	Drive Ready	Closed: Drive Ready. The drive is powered up, not in a fault state, and in the Drive mode	97
7	DC Bus Undervoltage	Closed: DC bus voltage is below the Uv trip level	97
8	During Baseblock (N.O.)	Closed: There is no output voltage	97
B	Torque Detection 1 (N.O.)	Closed: Output current/torque exceeds the torque value set in parameter L6-02 for longer than the time set in parameter L6-03	97
E	Fault	Closed: Fault occurred (other than CPF00 and CPF01)	97
F	Not used	Set this value when the terminal is not used, or when using the terminal in the pass-through mode	97
10	Minor Fault	Closed: An alarm is triggered	97
17	Torque Detection 1 (N.C.)	Open: When the output current exceeds the value set in parameter L6-02 for more time than is set in parameter L6-03	97
1A	Reverse Direction	Closed: Drive is running in the reverse direction	98
1E	Restart Enabled	Closed: An automatic restart is performed	98
3C	LOCAL/REMOTE Status	Closed: LOCAL Open: REMOTE	98
3D	Speed Search	Closed: Speed search is being executed	98
100 to 102; 104 to 108; 10B, 10E, 110, 117, 11A, 11E, 13C, 13D	H2 Parameter Functions Reversed Output Switching of 0 to 13D	Reverse the output switching of the multi-function output functions. Set the last two digits of 1□□ to reverse the output signal of that specific function Examples: Setting “108” reverses the output of “During baseblock”, which is setting value 08 Setting “13C” reverses the output of “LOCAL/REMOTE Status”, which is setting “3C”	98

No.	Name	Description	Range	Def.	Mode	Addr. Hex	Pg.
H3: Analog Input A1 Use H3 parameters to set the analog input terminal A1.							
H3-01	Terminal A1 Signal Level Selection	Sets the input level for terminal A1. 0: 0 to +10 V (lower limit) 1: 0 to +10 V (no lower limit) 2: 4 to 20 mA 3: 0 to 20 mA	0 to 3	0	O	410	98
H3-03 <22>	Terminal A1 Gain Setting	Sets the level of the input value when 10 V (20 mA) is input at terminal A1.	-999.9 to 999.9	100.0%	O	411	99
H3-04 <22>	Terminal A1 Bias Setting	Sets the level of the input value when 0 V (0 or 4 mA) is input at terminal A1.	-999.9 to 999.9	0.0%	O	412	99
H3-13	Analog Input Filter Time Constant	Sets the primary delay filter time constant for terminal A1 or potentiometer (optional). Used for noise filtering.	0.00 to 2.00	0.03 s	O	41B	101

<22> Parameter can be changed during run.

No.	Name	Description	Range	Def.	Mode	Addr. Hex	Pg.
H4: Multi-Function Analog Output AM Use H4 parameters to configure the multi-function analog output terminal AM.							
H4-01	Multi-Function Analog Output Terminal AM	Selects the data to be output through multi-function analog output terminal AM. Set the desired monitor parameter to the digits available in U□-□□. For example, enter “103” for U1-03. When using this terminal in through mode or when not using it at all, set “000” or “031”.	000 to 999	102	O	41D	*101*
H4-02 *<22>*	Multi-Function Analog Output Terminal AM Gain	Sets terminal AM output level when selected monitor is at 100%. Maximum output voltage is 10 V.	-999.9 to 999.9	100.0%	S	41E	*101*
H4-03 *<22>*	Multi-Function Analog Output Terminal AM Bias	Sets terminal AM output level when selected monitor is at 0%.	-999.9 to 999.9	0.0%	O	41F	*101*
H5: MEMOBUS/Modbus Communications Use H5 Parameters to connect the drive to a MEMOBUS/Modbus network (communication option required).							
H5-01 *<39>*	Drive Slave Address	Selects drive slave number (address) for MEMOBUS/Modbus communication. Cycle power for the setting to take effect.	0 to FF	1F	O	425	*193*
H5-02	Comm. Speed Selection	Selects the baud rate for MEMOBUS/Modbus communication. Cycle power for the setting to take effect. 0 : 1200 bps 1 : 2400 bps 2 : 4800 bps 3 : 9600 bps 4 : 19200 bps 5 : 38400 bps	0 to 5	3	O	426	*193*
H5-03	Comm. Parity Selection	Selects the communication parity for MEMOBUS/Modbus communication. Cycle power for the setting to take effect. 0: No parity 1: Even parity 2: Odd parity	0 to 2	0	O	427	*193*
H5-04	Stopping Method After Comm. Error	Selects the stopping method when a communication time-out fault (CE) is detected. 0: Ramp to stop 1: Coast to stop 2: Fast-stop 3: Alarm only	0 to 3	3	O	428	*193*
H5-05	Comm. Fault Detection Selection	Enables or disables the communications timeout fault (CE). 0: Disabled - A communication loss will not cause a communication fault. 1: Enabled - If communication is lost for more than 2 seconds, a CE fault will occur.	0, 1	1	O	429	*193*
H5-06	Drive Transmit Wait Time	Set the wait time between receiving and sending data.	10 to 65	10 ms	O	42A	*193*
H5-07	RTS Control Selection	Selects "request to send" (RTS) control: 0: Disabled - RTS is always on. 1: Enabled - RTS turns on only when sending.	0, 1	1	O	42B	*193*
H5-12	Run Command Method Selection	0: FWD/STOP, REV/STOP Method 1: RUN/STOP, FWD/REV Method	0, 1	0	O	43D	*193*
H5-13	MEMOBUS Freq. Reference and Freq. Monitor Unit	0: 0.1 Hz/1 1: o1-03 based 2: 100%/30000 3: 0.1%/1	0 to 3	0	O	43E	*193*

<22> Parameter can be changed during run.
<39> If this parameter is set to 0, the drive will be unable to respond to MEMOBUS/Modbus commands.

Note: Cycle power to the drive to enable MEMOBUS/Modbus settings.

◆ L: Protection Function

L parameters provide protection to the drive and motor, such as: control during momentary power loss, Stall Prevention, frequency detection, fault restarts, overtorque detection, and other types of hardware protection.

No.	Name	Description	Range	Def.	Mode	Addr. Hex	Pg.
L1: Motor Protection Functions Use L1 parameters to configure motor protective functions.							
L1-01	Motor Overload Protection Selection	Sets the motor thermal overload protection (oL1) based on the cooling capacity of the motor. 0: Disabled 1: Standard Fan Cooled (speed range < 10:1) 2: Standard Blower Cooled (speed range ≥ 10:1) **NOTICE:** When multiple motors are used the drive may not be able to provide protection, even if it is enabled in L1-01. Set L1-01 to “0” and ensure each motor has a thermal relay installed.	0 to 2	1	S	480	*102*

No.	Name	Description	Range	Def.	Mode	Addr. Hex	Pg.
L1-02	Motor Overload Protection Time	Sets the motor thermal overload protection (oL1) time. A larger L1-02 time will increase the time for an oL1 fault to occur. This parameter does not typically require adjustment. Should be set in accordance with the overload tolerance of the motor.	0.1 to 5.0	1.0 min	O	481	103
L1-13	Continuous Electrothermal Operation Selection	Determines whether or not to hold the electrothermal value when the power supply is interrupted. 0: Disabled 1: Enabled	0, 1	1	O	46D	103
L2: Momentary Power Loss Use L2 parameters to configure drive functions for momentary power loss conditions.							
L2-01	Momentary Power Loss Operation Selection	Enables and disables the momentary power loss function. 0: Disabled - Drive trips on (Uv1) fault when power is lost. 1: Power Loss Ride-Thru Time - Drive will restart if power returns within the Power Loss Ride-Thru Time. 2: CPU Power Active - Drive will restart if power returns as long as the CPU is working.	0 to 2	0	O	485	103
L3: Stall Prevention Function Use L3 parameters to configure the Stall Prevention function.							
L3-01	Stall Prevention Selection during Acceleration	Selects the Stall Prevention method used to prevent excessive current during acceleration. 0: Disabled - Motor accelerates at active acceleration rate. The motor may stall if load is too heavy or accel time is too short. 1: General Purpose - When output current exceeds L3-02 level, acceleration stops. Acceleration will continue when the output current level falls below the L3-02 level.	0, 1 <63>	1	O	48F	104
L3-02	Stall Prevention Level during Acceleration	Used when L3-01 = 1. 100% is equal to the drive rated current. Decrease the set value if stalling or excessive current occurs with default setting.	0 to 150	<7>	O	490	105
L3-04	Stall Prevention Selection during Deceleration	When using a braking resistor, use setting "0". 0: Disabled - The drive decelerates at the active deceleration rate. If the load is too large or the deceleration time is too short, an ov fault may occur. 1: General Purpose - The drive decelerates at the active deceleration rate, but if the main circuit DC bus voltage reaches the Stall Prevention level, deceleration will stop. Deceleration will continue once the DC bus level drops below the Stall Prevention level. 4: Overexcitation Deceleration - Decelerates with the flux level determined by n3-13 (Overexcitation Gain).	0, 1, 4	1	S	492	105
L3-05	Stall Prevention Selection during Run	Selects the Stall Prevention method to use to prevent drive faults during run. 0: Disabled - Drive runs a set frequency. A heavy load may cause the drive to trip on an oC or oL fault. 1: Decel Time 1 - The drive will decelerate at Decel Time 1 (C1-02) if the output current exceeds the level set by L3-06. Once the current level drops below the L3-06 level, the drive will accelerate back to its frequency reference at the active acceleration rate. 2: Decel Time 2 - Same as setting 1 except the drive decelerates at Decel Time 2 (C1-04). When output frequency is 6 Hz or less, Stall Prevention during run is disabled regardless of the setting in L3-05.	0 to 2	1	O	493	106
L3-06	Stall Prevention Level during Run	Enabled when L3-05 is set to "1" or "2". 100% is equal to the drive rated current. Decrease the set value if stalling or excessive current occurs with the default settings. Upper level is determined by C6-01 and L8-38.	30 to 150	<7>	O	494	106
L4: Frequency Detection Use L4 parameters to configure frequency detection operation.							
L4-01	Speed Agreement Detection Level	These parameters configure the multi-function output (H2-01 = 2, 4, 5) settings "Speed Agree 1", "Frequency Detection 1," and "Frequency detection 2".	0.0 to 400.0	0.0 Hz	O	499	106
L4-07	Frequency Detection Conditions	0: No detection during baseblock. 1: Detection always enabled.	0, 1	0	O	470	107
L5: Fault Reset Use L5 parameters to configure Automatic Restart after fault.							
L5-01	Number of Auto Restart Attempts	Sets the counter for the number of times the drive attempts to restart when one of the following faults occurs: oC, ov, PF, rH, oL1, oL2, oL3, Uv1. When the drive operates without fault for 10 minutes, the counter will be reset.	0 to 10	0	O	49E	108

No.	Name	Description	Range	Def.	Mode	Addr. Hex	Pg.
L6: Overtorque Detection Use L6 parameters to configure overtorque detection.							
L6-01	Torque Detection Selection 1	Selects the overtorque operation. Overtorque is determined by the settings in parameters L6-02 and L6-03. The multi-function output settings (H2-01= B and 17) are also active if programmed. 0: Disabled 1: oL3 at Speed Agree - Alarm (overtorque detection only active during Speed Agree and operation continues after detection). 2: oL3 at RUN - Alarm (overtorque detection is always active and operation continues after detection). 3: oL3 at Speed Agree - Fault (overtorque detection only active during Speed Agree and drive output will shut down on an oL3 fault). 4: oL3 at RUN - Fault (overtorque detection is always active and drive output will shut down on an oL3 fault).	0 to 4	0	O	4A1	*108*
L6-02	Torque Detection Level 1	Sets the overtorque detection level. 100% is equal to the motor rated current.	0 to 300	150%	O	4A2	*109*
L6-03	Torque Detection Time 1	Sets the length of time an overtorque condition must exist before Torque Detection is triggered.	0.0 to 10.0	0.1 s	O	4A3	*109*
L8: Hardware Protection Use L8 parameters to configure hardware protection functions.							
L8-01	Internal Dynamic Braking Resistor Protection Selection (ERF type)	Selects the Braking resistor when using a 3% duty cycle heatsink mounted braking resistor. This parameter does not enable or disable the braking transistor of the drive. 0: Resistor overheat protection disabled 1: Resistor overheat protection enabled	0, 1	0	O	4AD	*109*
L8-05	Input Phase Loss Protection Selection	Selects the detection of input current phase loss, power supply voltage imbalance, or main circuit electrolytic capacitor deterioration. 0: Disabled 1: Enabled	0, 1	1 <77>	O	4B1	*109*
L8-10	Heatsink Cooling Fan Operation Selection	Controls the heatsink cooling fan operation. 0: Fan On-Run Mode - Fan will operate only when the drive is running and for 60 seconds after stop. 1: Fan always on - Cooling fan operates whenever the drive is powered up.	0, 1	0	O	4B6	*109*
L8-12	Ambient Temperature Setting	Used to input the ambient temperature. This value adjusts the drive oL2 detection level.	-10 to 50	30 °C	O	4B8	*110*
L8-18	Soft CLA Selection	Selects the software current limit function. Typically no adjustment is required. 0: Disabled 1: Enabled	0, 1	1	O	4BE	*110*
L8-35	Installation Method Selection	Selects the installation type: 0: Standard installation of Open Chassis drive 1: Side-by-Side installation with top cover removed 2: Standard Installation of NEMA Type 1 drive 3: Finless / Fin outside installation	0 to 3	0	O	4ECH	*110*
L8-38	Carrier Frequency Reduction	Provides protection to the IGBTs by reducing the carrier frequency at low speeds. 0: Disabled 1: Enabled below 6 Hz 2: Enabled for the whole speed range 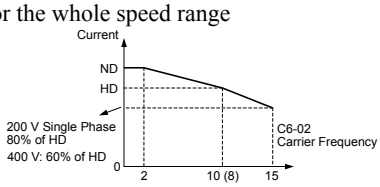	0 to 2	0 <12>	O	4EF	*110*

<7> Default setting value is 120% when C6-01 is set to 1 (ND) and 150% when C6-01 is set to 0 (HD).
<12> Default setting value is dependent on parameter o2-04, Drive Model Selection.
<63> When enabled, the drive stops accelerating when it exceeds the value of L3-02, Stall Prevention Level. The drive decelerates after 100 ms and begins accelerating again after restoring the current level.
<77> Disabled for single-phase 200 V drives.

◆ n: Advanced Performance Set-Up

The n parameters are used to adjust more advanced performance characteristics.

No.	Name	Description	Range	Def.	Mode	Addr. Hex	Pg.
n1: Hunting Prevention Use n1 parameters to configure hunting prevention operation.							
n1-02	Hunting Prevention Gain Setting	Sets the gain for the Hunting Prevention Function. If the motor vibrates while lightly loaded, increase the gain by 0.1 until vibration ceases. If the motor stalls, decrease the gain by 0.1 until the stalling ceases.	0.00 to 2.50	1.00	O	581	*112*
n3: Overexcitation Braking Use n3 parameters to configure the overexcitation braking function.							
n3-13	Overexcitation Deceleration Gain	Applies a gain to the V/f pattern during deceleration (L3-04 = 4). Returns to normal values after ramp to stop or at re-acceleration. To increase the braking power of overexcitation, increase the gain by 1.25 to 1.30.	1.00 to 1.40	1.10	O	531	*112*

◆ o: Operator Related Parameters

o parameters are used to set up the LED digital operator displays.

No.	Name	Description	Range	Def.	Mode	Addr. Hex	Pg.
o1: Display Settings Use o1 parameters to configure the digital operator display.							
o1-02 *<22>*	User Monitor Selection After Power Up	Selects the monitor to display upon power-up. 1: Frequency Reference (U1-01) 2: Forward/Reverse 3: Output Frequency (U1-02) 4: Output Current (U1-03)	1 to 4	1	O	501	*113*
o1-03	Digital Operator Display Selection	Sets the units to display the frequency reference and output frequency. 0: 0.01 Hz 1: 0.01% (100% = E1-04)	0, 1	0	O	502	*113*
o2: Operator Keypad Functions Use o2 parameters to configure LED digital operator key functions.							
o2-02	STOP Key Function Selection	Determines if the STOP key on the digital operator will stop the drive when operating from the external terminals or via serial communication. 0: Disabled 1: Enabled	0, 1	1	O	506	*113*
o2-04	Drive Model Selection	Sets the drive model. This parameter only needs to be set when installing a new control board. Do not change for other reason.	0 to FF	dep. on drive spec.	O	508	*113*
o2-05	Frequency Reference Setting Method Selection	Selects if the ENTER key must be pressed when inputting the frequency reference by the operator keypad. 0: Data/Enter key must be pressed to enter a frequency reference. 1: Data/Enter key is not required. The frequency reference is adjusted by the UP and DOWN keys.	0, 1	0	O	509	*114*
o2-06	Operation Selection when Digital Operator is Disconnected	Sets drive action when the digital operator is removed in LOCAL mode or with b1-02 = 0 (valid for optional remote operator only). 0: The drive will continue operation 1: The drive will trigger a fault (oPr) and the motor will coast to stop	0, 1	0	O	50A	*114*
o2-09	Initialization mode	(Maker setting)	0 to 3	dep. on drive spec.	O	50D	*114*
o3: Copy Function Use o3 parameters to Read, Copy and Verify the parameter settings to and from the drive.							
o3-01	Copy Function Selection	Selects the copy function operation. 0: No action 1: READ - All parameters are read from the drive and stored in the LED operator. 2: COPY - All parameters are copied from the LED operator to the drive. 3: VERIFY - Parameter settings in the drive are compared to those in the LED operator. **NOTE:** When using the copy function, the drive model number (o2-04) and the software number (U1-14) must match or an error will occur.	0 to 3	0	O	515	*114*
o3-02	Copy Function READ Permission	Locks the READ operation to prevent accidental overwriting of the data stored in the LED operator. 0: READ operation prohibited 1: READ operation allowed	0, 1	0	O	516	*114*

No.	Name	Description	Range	Def.	Mode	Addr. Hex	Pg.
o4: Maintenance Period Use o4 parameters to perform maintenance.							
o4-01	Accumulated Operation Time Setting	Sets the value for the cumulative operation time of the drive in units of 10 h.	0 to 9999	0	O	50B	*115*
o4-02	Accumulated Operation Time Selection	Determines, how the cumulative operation time (U4-01) is counted. 0: Logs power-on time 1: Logs operation time when the drive output is active (output operation time).	0, 1	0	O	50C	*115*
o4-03	Cooling Fan Operation Time Setting	Sets the value of the fan operation time in units of 10 h.	0 to 9999	0	O	50E	*115*
o4-05	Capacitor Maintenance Setting	Sets the value of the capacitor maintenance time monitor U4-05.	0 to 150	0%	O	51D	*115*
o4-07	Soft Charge Bypass Relay Maintenance Setting	Sets the value of the Soft Charge Bypass Relay Maintenance monitor U4-06.	0 to 150	0%	O	523	*115*
o4-09	IGBT Maintenance Setting	Sets the value of the IGBT Maintenance monitor U4-07.	0 to 150	0%	O	525	*115*
o4-11	U2 Initialize Selection	Selects if U2-□□ (Fault History) monitors are reset at drive initialization. 0: Saves the fault monitor data 1: Resets the fault monitor data	0, 1	0	O	510	*116*

<12> Default setting value is dependent on parameter o2-04, Drive Model Selection.
<22> Parameter can be changed during run.

◆ U: Monitors

Monitor parameters allow the user to view drive status, fault information, and other information about drive operation.

No.	Name	Description	Analog Output Level	Unit	Mode	Addr. Hex
U1: Operation Status Monitors Use U1 monitors to display the operation status of the drive.						
U1-01	Frequency Reference	Monitors the frequency	10 V: Max frequency	0.01 Hz	O	40
U1-02	Output Frequency	Displays the output frequency. Display units are determined by o1-03.	10 V: Max frequency	0.01 Hz	O	41
U1-03	Output Current	Displays the output current.	10 V: Drive rated current	0.01A	O	42
U1-06	Output Voltage Reference	Displays the output voltage.	10 V: 200 Vrms (400 Vrms)	0.1 V	O	45
U1-07	DC Bus Voltage	Displays the DC bus voltage.	10 V: 400 V (800 V)	1 V	O	46
U1-10	Input Terminal Status	Displays the input terminal status. 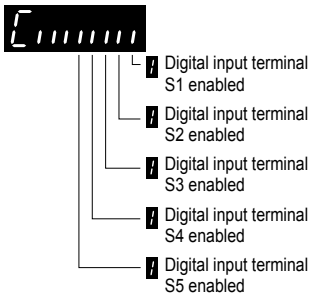 	No output signal available	–	O	49
U1-11	Output Terminal Status	Displays the output terminal status. 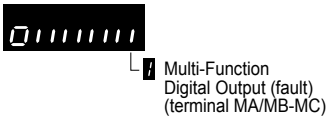 	No output signal available	–	O	4A
U1-13	Terminal Input Level	Displays analog input A1 level: 100% when input is 10 V or 20 mA.	10 V/20 mA: 100%	0.1%	O	4E

No.	Name	Description	Analog Output Level	Unit	Mode	Addr. Hex
U1-19	MEMOBUS/ Modbus Error Code	Displays the contents of a MEMOBUS/Modbus error. 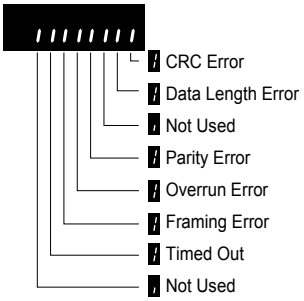	No output signal available	–	O	66
U1-25	Software No. (Flash)	Flash ID	No signal output avail.	–	O	4D
U1-26	Software No. (ROM)	ROM ID	No signal output avail.	–	O	5B
U2: Fault History Use U2 monitor parameters to view fault history data.						
U2-01	Current Fault	Display of the current fault.	No signal output avail.	–	O	80
U2-02	Previous Fault	Display of the previous fault. o4-11 resets the values for U2-02	No signal output avail.	–	O	81
U4: Maintenance Monitors Use U4 parameters to display drive maintenance information.						
U4-01	Accumulated Operation Time	Displays the cumulative operation time of the drive. The value for the cumulative operation time counter can be reset in parameter o4-01. Use parameter o4-02 to determine if the operation time should start as soon as the power is switched on or only while the run command is present. The maximum number displayed is 99999, after which the value is reset to 0.	No signal output avail.	1 h	O	4C
U4-04	Cooling Fan Maintenance	Displays main cooling fan usage time in as a percentage of their expected performance life. Parameter o4-03 can be used to reset this monitor.	No signal output avail.	1%	O	7E
U4-05	Capacitor Maintenance	Displays main circuit capacitor usage time in as a percentage of their expected performance life. Parameter o4-05 can be used to reset this monitor.	No signal output avail.	1%	O	7C
U4-06	Soft Charge Bypass Relay Maintenance	Displays the soft charge bypass relay maintenance time as a percentage of the estimated product life. Parameter o4-07 can be used to reset this monitor.	No signal output avail.	1%	O	7D6
U4-07	IGBT Maintenance	Displays IGBT usage time as a percent of expected performance life. Parameter o4-09 can be used to reset this monitor.	No signal output avail.	1%	O	7D7
U4-08	Heatsink Temperature	Displays the heatsink temperature.	10 V: 100 °C	1 °C	O	68
U4-09	LED Check	Lights all segments of the LED to verify that the display is working properly.	No signal output avail.	–	O	3C
U4-13	Peak Hold Current	Displays the peak hold current during run.	10 V: Motor rated current	0.01A	O	7CF

B.3 Defaults by Drive Capacity (o2-04) and ND/HD (C6-01)

Table B.1 Single-Phase, 200 V Class Drives Default Settings by Drive Capacity and ND/HD Settings

No.	Description	Unit	Default Settings					
–	Model CIMR-JC	–	BA0001		BA0002		BA0003	
C6-01	Normal/Heavy Duty	–	HD	ND	HD	ND	HD	ND
o2-04	Drive Model Selection	Hex	30		31		32	
–	Motor rated power	kW	0.1	0.2	0.2	0.4	0.4	0.75
C6-02	Carrier frequency	–	4	7	4	7	4	7
E2-01	Motor rated current	A	0.60	1.10	1.10	1.90	1.90	3.30
E2-02	Motor rated slip	Hz	2.50	2.60	2.60	2.90	2.90	2.50
E2-03	Motor no-load current	A	0.40	0.80	0.80	1.20	1.20	1.80
E2-05	Motor line-to-line resistance	Ω	35.98	20.56	20.56	9.842	9.842	5.156
–	Momentary power loss ride-through time	s	0.1	0.1	0.1	0.1	0.1	0.1
–	Mom. power loss Baseblock time	s	0.2	0.2	0.2	0.2	0.2	0.3

No.	Description	Unit	Default Settings			
–	Model CIMR-JC	–	BA0006		BA0010	
C6-01	Normal/Heavy Duty	–	HD		HD	ND
o2-04	Drive Model Selection	Hex	33		34	
C6-02	Carrier frequency	–	4	7	3	7
E2-01	Motor rated current	A	3.30	6.20	6.20	8.50
E2-02	Motor rated slip	Hz	2.50	2.60	2.60	2.90
E2-03	Motor no-load current	A	1.80	2.80	2.80	3.00
E2-05	Motor line-to-line resistance	Ω	5.156	1.997	1.997	1.601
–	Momentary power loss ride-through time	s	0.2	0.2	0.3	0.3
–	Momentary power loss Baseblock time	s	0.3	0.4	0.4	0.5

Table B.2 Three-Phase, 200 V Class Drives Default Settings by Drive Capacity and ND/HD Setting

No.	Description	Unit	Default Settings									
–	Model CIMR-JC	–	2A0001		2A0002		2A0004		2A0006		2A0010	
C6-01	Normal/Heavy Duty	–	HD	ND	HD	ND	HD	ND	HD	ND	HD	ND
o2-04	Drive Model Selection	Hex	60		61		62		63		65	
–	Motor rated power	kW	0.1	0.2	0.2	0.4	0.4	0.75	0.75	1.1	1.5	2.2
C6-02	Carrier frequency	–	4	7	4	7	4	7	4	7	3	7
E2-01	Motor rated current	A	0.60	1.10	1.10	1.90	1.90	3.30	3.30	4.90	6.20	8.50
E2-02	Motor rated slip	Hz	2.50	2.60	2.60	2.90	2.90	2.50	2.50	2.60	2.60	2.90
E2-03	Motor no-load current	A	0.40	0.80	0.80	1.20	1.20	1.80	1.80	2.30	2.80	3.00
E2-05	Motor line-to-line resistance	Ω	35.98	20.56	20.56	9.842	9.842	5.156	5.156	3.577	1.997	1.601
–	Momentary power loss ride-through time	s	0.1	0.1	0.1	0.1	0.1	0.1	0.2	0.2	0.3	0.3
–	Momentary power loss Baseblock time	s	0.2	0.2	0.2	0.2	0.2	0.3	0.3	0.4	0.4	0.5

No.	Description	Unit	Default Settings			
–	Model CIMR-JC	–	2A0012		2A0020	
C6-01	Normal/Heavy Duty	–	HD	ND	HD	ND
o2-04	Drive Model Selection	Hex	66		68	
–	Motor rated power	kW	2.2	3.0	3.7	5.5
C6-02	Carrier frequency	–	3	7	3	7
E2-01	Motor rated current	A	8.50	11.40	14.0	19.60
E2-02	Motor rated slip	Hz	2.90	2.70	2.73	1.50
E2-03	Motor no-load current	A	3.00	3.70	4.50	5.10
E2-05	Motor line-to-line resistance	Ω	1.601	1.034	0.771	0.399
–	Momentary power loss ride-through time	s	0.5	0.5	1	1
–	Momentary power loss Baseblock time	s	0.5	0.5	0.6	0.7

Table B.3 Three-Phase 400 V Class Drives Default Settings by Drive Capacity and ND/HD Setting

No.	Description	Unit	Default Settings							
–	Model CIMR-JC	–	4A0001		4A0002		4A0004		4A0005	
C6-01	Normal/Heavy Duty	–	HD	ND	HD	ND	HD	ND	HD	ND
o2-04	Drive Model Selection	Hex	91		92		93		94	
–	Motor rated power	kW	0.2	0.4	0.4	0.75	0.75	1.5	1.5	2.2
C6-02	Carrier frequency	–	3	7	3	7	3	7	3	7
E2-01	Motor rated current	A	0.60	1.00	1.00	1.60	1.60	3.10	3.10	4.20
E2-02	Motor rated slip	Hz	2.50	2.90	2.90	2.60	2.60	2.50	2.50	3.00
E2-03	Motor no-load current	A	0.40	0.60	0.60	0.80	0.80	1.40	1.40	1.50
E2-05	Motor line-to-line resistance	Ω	83.94	38.198	38.198	22.459	22.459	10.1	10.1	6.495
–	Momentary power loss ride-through time	s	0.1	0.1	0.1	0.1	0.2	0.2	0.3	0.3
–	Momentary power loss Baseblock time	s	0.2	0.2	0.2	0.3	0.3	0.4	0.4	0.5

No.	Description	Unit	Default Setting					
–	Model CIMR-JC	–	4A0007		4A0009		4A0011	
C6-01	Normal/Heavy Duty	–	HD	ND	HD	ND	HD	ND
o2-04	Drive Model Selection	–	95		96		97	
–	Motor rated power	kW	2.2	3.0	3.0	3.7	4.0	5.5
C6-02	Carrier frequency	–	3	7	3	7	3	7
E2-01	Motor rated current	A	4.20	5.70	5.70	7.00	7.00	9.80
E2-02	Motor rated slip	Hz	3.00	2.70	2.70	2.70	2.70	1.50
E2-03	Motor no-load current	A	1.50	1.90	1.90	2.30	2.30	2.60
E2-05	Motor line-to-line resistance	Ω	6.495	4.360	4.360	3.333	3.333	1.595
–	Momentary power loss ride-through time	s	0.5	0.5	0.5	0.5	0.5	0.5
–	Momentary power loss Baseblock time	s	0.5	0.5	0.5	0.6	0.6	0.7

Appendix: C

MEMOBUS/Modbus Communications

C.1 SECTION SAFETY....188
C.2 MEMOBUS/MODBUS CONFIGURATION....189
C.3 COMMUNICATION SPECIFICATIONS....190
C.4 CONNECTING TO A NETWORK....191
C.5 MEMOBUS/MODBUS SETUP PARAMETERS....193
C.6 DRIVE OPERATIONS BY MEMOBUS/MODBUS....195
C.7 COMMUNICATIONS TIMING....196
C.8 MESSAGE FORMAT....197
C.9 MESSAGE EXAMPLES....199
C.10 MEMOBUS/MODBUS DATA TABLE....201
C.11 CHANGING DRIVE PARAMETERS....207
C.12 COMMUNICATION ERRORS....208
C.13 SELF-DIAGNOSTICS....209

C.1 Section Safety

⚠ DANGER

Electrical Shock Hazard

Do not connect or disconnect wiring while the power is on.

Failure to comply will result in death or serious injury.

Before servicing, disconnect all power to the equipment. The internal capacitor remains charged even after the power supply is turned off. The charge indicator LED will extinguish when the DC bus voltage is below 50 Vdc. To prevent electric shock, wait at least one minute after all indicators are OFF and measure the DC bus voltage level to confirm safe level.

⚠ WARNING

Do not operate equipment with covers removed.

Failure to comply could result in death or serious injury.

Do not perform work on the drive while wearing loose clothing, jewelry or without eye protection.

Failure to comply could result in death or serious injury.

Remove all metal objects such as watches and rings, secure loose clothing and wear eye protection before beginning work on the drive.

Do not remove covers or touch circuit boards while the power is on.

Failure to comply could result in death or serious injury.

Do not allow unqualified personnel to use equipment.

Failure to comply could result in death or serious injury.

Maintenance, inspection and replacement of parts must be performed only by authorized personnel familiar with installation, adjustment and maintenance of AC drives.

Before wiring terminals, disconnect all power to the equipment.

The internal capacitor remains charged even after the power supply is turned off. The charge indicator LED will extinguish when the DC bus voltage is below 50 Vdc. To prevent electric shock, wait at least one minute after all indicators are OFF and measure the DC bus voltage level to confirm safe level.

Fire Hazard

Tighten all terminal screws to the specified tightening torque.

Loose electrical connections could result in death or serious injury by fire due to overheating of electrical connections.

⚠ CAUTION

Crush Hazard

Do not carry the drive by the front cover.

Failure to comply may result in minor or moderate injury from the main body of the drive falling.

NOTICE

Observe proper electrostatic discharge procedures (ESD) when handling the drive and circuit boards.

Failure to comply may result in ESD damage to the drive circuitry.

Check all the wiring to ensure that all connections are correct after installing the drive and connecting any other devices.

Failure to comply could result in damage to the drive.

C.2 MEMOBUS/Modbus Configuration

Drives can be controlled from a PLC or other master device via serial communications after installing the interface for MEMOBUS/Modbus communication (SI-485/J).

MEMOBUS/Modbus communication can be configured using one master (PLC) and a maximum of 255 slaves. The drive has slave functionality only, meaning that serial communication is normally initiated from the master and responded to by the slaves.

The master performs serial communications with only one slave at a time. The address or node for each slave must be set beforehand so that the master can communicate with the slave at that address. A slave that receives a command from the master will perform the specified function and then send a response back to the master.

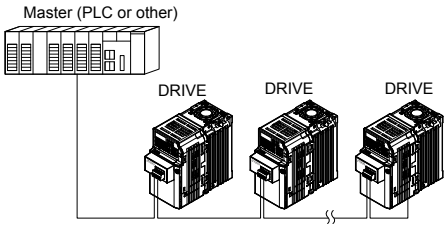

Figure C.1 Connecting Multiple Drives to a PLC

C.3 Communication Specifications

MEMOBUS/Modbus specifications appear in the following table:

Item	Specifications	
Interface	RS-422, RS-485	
Communications Cycle	Asynchronous (Start-stop synchronization)	
Communication Parameters	Communication Speeds Available	1.2; 2.4; 4.8; 9.6; 19.2; 38.4 kbps
	Data length	8 bit (fixed)
	Parity	Select even, odd, or none
	Stop bit	1 bit (fixed)
Protocol	MEMOBUS/Modbus (using RTU mode only)	
Max Number of Slaves	255 drives (RS-485)	

C.4 Connecting to a Network

This section explains the connection of a drive to a MEMOBUS/Modbus network and the network termination.

◆ Network Cable Connection

Follow the instructions below to connect the drive to a MEMOBUS/Modbus network.

1. With the power shut off, connect the communications cable to the drive and the master. Use the terminals shown in the figure below for network cable connections.

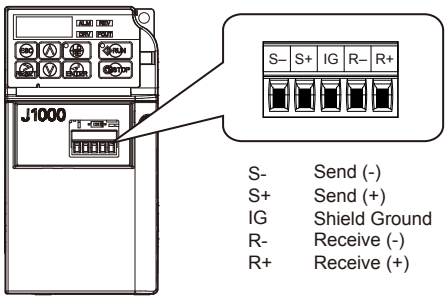

Figure C.2 Serial Communications Cable Connection Terminals

Note: Separate the communications cables from the main circuit cables and other wiring and power cables. Use shielded cables for the communications cables, and properly shielded clamps to prevent problems with noise. When using RS-485 communications, connect S+ to R+, and S- to R- as shown in the diagram below.

2. Check or set the terminating resistance at all slaves. Refer to ***Network Termination*** for Network Termination on SI-485/J.
3. Switch the power on.
4. Set the parameters needed for serial communications (H5-01 through H5-07, -12, -13) using the LED operator.
5. Shut the power off and wait until the display on the LED operator goes out completely.
6. Turn the power back on.
7. The drive is now ready to begin communicating with the master.

◆ Wiring Diagram for Multiple Connection

Figure C.3 and ***Figure C.4*** explain the wiring diagrams for multiple connections using MEMOBUS/Modbus communication.

■ RS-485 Interface

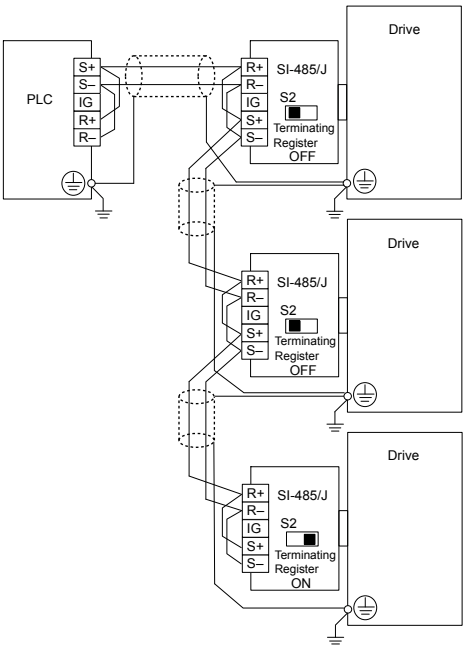

Figure C.3 RS-485 Interface

Note:
- Turn on the DIP switch at the SI-485/J that is located at the end of the network. Turn it off at all other slaves.
- Set H5-07 to “1” when using the RS-485 interface.

■ RS-422 Interface

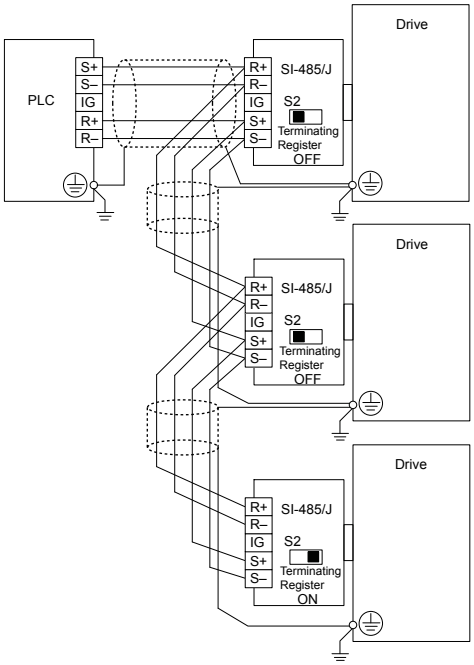

Figure C.4 RS-422 Interface

Note:
- Turn on the DIP switch at the SI-485/J that is located at the end of the network. Turn it off at all other slaves.
- Set H5-07 to “0” when using the RS-485 interface.

◆ Network Termination

The two ends of the MEMOBUS/Modbus network line have to be terminated. The Interface for MEMOBUS/Modbus Communication (SI-485/J) has a built in terminating resistance that can be enabled or disabled using DIP switch S2. If a drive is located at the end of a network line, enable the terminating resistance by setting DIP switch S2 to the ON position. Disable the terminating resistance on all slaves that are not located at the network line end. ***Figure C.5*** llustrates the setting of DIP switch S2.

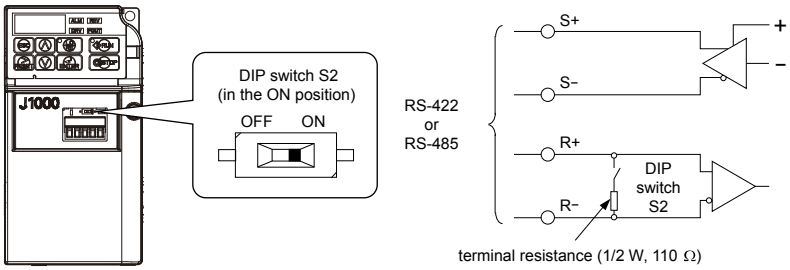

Figure C.5 Serial Communications Terminal and DIP Switch S2

C.5 MEMOBUS/Modbus Setup Parameters

◆ MEMOBUS/Modbus Serial Communication

This section describes parameters necessary to set up MEMOBUS/Modbus communications.

■ H5-01: Drive Slave Address

Sets the drive slave address used for MEMOBUS/Modbus communications.

Note: After changing this parameter, the power must be cycled to enable the new setting.

No.	Name	Setting Range	Default
H5-01	Drive Slave Address	0 to FF <1>	1F

<1> If the address is set to 0, no response will be provided during communications.

For serial communications to work, each individual slave drive must be assigned a unique slave address. Setting H5-01 to any value besides 0 assigns the drive its address in the network. Slave address don't need to be assigned in sequential order, but each address needs to be unique so that no two drives have the same address.

■ H5-02: Communication Speed Selection

Sets the MEMOBUS/Modbus communications speed.

Note: After changing this parameter, the power must be cycled to enable the new setting.

No.	Name	Setting Range	Default
H5-02	Communication Speed Selection	0 to 5	3

H5-02	Communication Speed
0	1200 bps
1	2400 bps
2	4800 bps
3	9600 bps
4	19200 bps
5	38400 bps

■ H5-03: Communication Parity Selection

Sets the parity used for MEMOBUS/Modbus communications.

Note: After changing this parameter, the power must be cycled to enable the new setting.

No.	Name	Setting Range	Default
H5-03	Communication Parity Selection	0 to 2	0

Setting 0: No Parity

Setting 1: Even Parity

Setting 2: Odd Parity

■ H5-04: Stopping Method after Communication Error

Selects the stopping method after a communications error (CE) has occurred.

No.	Name	Setting Range	Default
H5-04	Stopping Method after Communication Error	0 to 3	3

Setting 0: Ramp to Stop Using Current Accel/Decel Time

Setting 1: Coast to Stop

Setting 2: Fast-stop Using C1-09

Setting 3: Alarm Only, Continue Operation

■ H5-05: Communication Fault Detection Selection

Enables or disabled the communication error (CE) detection for MEMOBUS/Modbus communications.

No.	Name	Setting Range	Default
H5-05	Communication Fault Detection Selection	0 or 1	1

Setting 0: Disabled

No error detection. The drive continues operation.

Setting 1: Enabled

If the drive does not receive data from the master for longer than 2 s, then a CE fault will be triggered and the drive will operate as determined by parameter H5-04.

■ H5-06: Drive Transmit Wait Time

Sets the time the drive waits after receiving data from a master until responding data.

No.	Name	Setting Range	Default
H5-06	Drive Transmit Wait Time	5 to 65 ms	10 ms

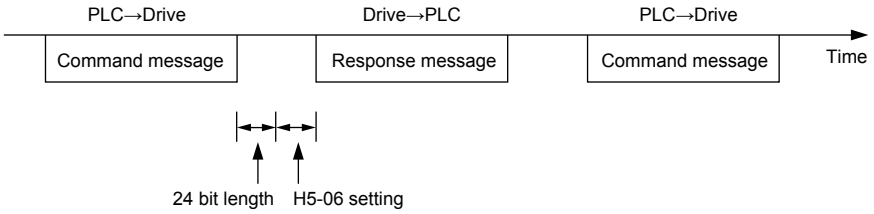

Figure C.6 Drive Transmit Wait Time Setting

■ H5-07: RTS Control Selection

Enables or disables RTS control.

No.	Name	Setting Range	Default
H5-07	RTS Control Selection	0 or 1	1

Setting 0: Disabled - RTS is Always ON

Use this setting when using RS-422 signals for communications.

Setting 1: Enabled - RTS Turns ON when Sending

Use this setting when using RS-485 signals for communications.

■ H5-12: Run Command Method Selection

Selects the type of sequence used when the Run command source is set to MEMOBUS/Modbus communications (b1-02 = 2).

No.	Name	Setting Range	Default
H5-12	Run Command Method Selection	0 or 1	0

Setting 0: FWD/Stop, REV/Stop

Setting bit 0 of MEMOBUS/Modbus register will start and stop the drive in the forward direction. Setting bit 1 will start and stop the drive in reverse.

Setting 1: Run/Stop, FWD/REV

Setting bit 0 of MEMOBUS/Modbus register will start and stop the drive. Setting bit 1 changes the direction.

■ H5-13 MEMOBUS Frequency Reference and Frequency Monitor Unit

No.	Name	Setting Range	Default
H5-13	MEMOBUS Frequency Reference and Frequency Monitor Unit	0 to 3	0

Setting 0: 0.1Hz / 1

Setting 1: o1-03 based

Setting 2: 100% / 30000

Setting 3: 0.1% / 1

C.6 Drive Operations by MEMOBUS/Modbus

The drive operations that can be performed by MEMOBUS/Modbus communication depend on drive parameter settings. This section explains the functions that can be used and related parameter settings.

◆ Observing the Drive Operation

A PLC can perform the following actions with MEMOBUS/Modbus communications at any time regardless of parameter settings (except H5-□□).

- Observe drive status and drive control terminal status from a PLC.
- Read and write parameters.
- Set and reset faults.
- Set multi-function inputs. Inputs settings from the input terminals S□ and from MEMOBUS/Modbus communications are both linked by an OR operation.

◆ Controlling the Drive

To start and stop the drive or set the frequency reference using MEMOBUS/Modbus communications, an external reference must be selected and the parameters listed below must be adjusted accordingly.

Table C.1 Setting Parameters for Drive Control from MEMOBUS/Modbus

Parameter	Name	Required Setting
b1-01	Frequency Reference Selection	2
b1-02	Run Command Selection	2

Refer to b1-01: Frequency Reference Selection on page 72 and *Refer to b1-02: Run Command Selection on page 73* for details on external reference parameter selections.

C.7 Communications Timing

To prevent overrun in the slave drive, the master should wait a certain time between sending messages to the same drive. In the same way, the slave drive must wait before sending response messages to prevent an overrun in the master. This section explains the message timing.

◆ Command Messages from Master to Drive

In order to prevent overrun and data loss, the master must wait between receiving a response and sending the same type of command as before to the same slave drive. The minimum wait time depends on the command as shown in the table below.

Table C.2 Minimum Wait Time for Sending Messages

Command Type	Example	Minimum Wait Time
1	• Control command (Run, Stop) • Set inputs/outputs • Read monitors and parameter values	10 ms
2	• Write parameters	50 ms <1>
3	• Save changes using an Enter command	3 to 5 s <1>

<1> If the drive receives command type 1 data during the minimum wait time, it will perform the command and then respond. However, if it receives a command type 2 or 3 during that time, either a communication error will result or the command will be ignored.

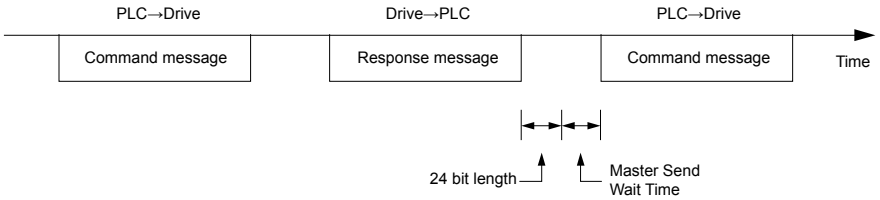

Figure C.7 Minimum Wait Time for Sending Messages

A timer should be set in the master to check how long it takes for the slave drive(s) to respond to the master. If no response is received within a certain amount of time, the master should try resending the message.

◆ Response Messages from Drive to Master

If the drive receives a command from the master, it will process the data received and wait for the time set in H5-06 until it responds. Increase H5-06 if the drive response causes overrun in the master.

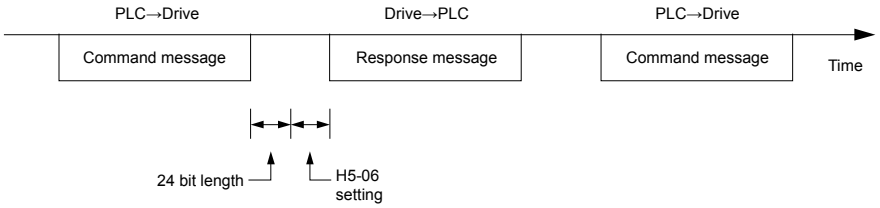

Figure C.8 Minimum Response Wait Time

C.8 Message Format

◆ Message Content

In MEMOBUS/Modbus communications, the master sends commands to the slave, and the slave responds. The message format is configured for both sending and receiving as shown below, and the length of data packets depends on the command (function) content.

SLAVE ADDRESS
FUNCTION CODE
DATA
ERROR CHECK

◆ Slave Address

The slave address in the message defines the note the message is sent to. Use addresses between 0 and FFH. If a message with slave address 0 is sent (broadcast), the command from the master will be received by all slaves. The slaves do not provide a response to a broadcast type message.

◆ Function Code

The three types of function codes are shown in the table below.

Function Code	Function Name	Data Length (bytes)			
		Command Message		Response Message	
		Minimum	Maximum	Minimum	Maximum
03H	Read MEMOBUS/Modbus registers	8	8	7	37
08H	Loopback test	8	8	8	8
10H	Write to multiple MEMOBUS/Modbus registers	11	41	8	8

◆ Data

Configure consecutive data by combining the MEMOBUS/Modbus register address (test code in case of a loopback test) and the data the register contains. The data length changes depending on the command details.

A drive MEMOBUS/Modbus register always has a data length of two bytes. Therefore data written into drive registers must also always have a length of two bytes. Register data read out from the drive will always consist of two bytes.

◆ Error Check

The drive uses a CRC-16 (cyclic redundancy check, checksum method) for checking data validity. Use the procedure described below when calculating the CRC-16 checksum for command data or when verifying response data.

■ Command Data

When the drive receives data, it calculates the CRC-16 checksum from the data and compares it to the CRC-16 value received within the message. Both must match before a command is processed.

An initial value of FFFFH (i.e., all 16 bits equal 1) must be used for CRC-16 calculations for the MEMOBUS/Modbus protocol.

Calculate the CRC-16 checksum using the following steps:

- The starting value is FFFFH.
- Perform an XOR operation of this value and the slave address.
- Right shift the result.
- When the overflow bit of the shift operation becomes 1, perform an XOR operation of the result from step 3 above and the fix value A001H.
- Repeat steps 3 and 4 until eight shift operations have been performed.
- After eight shift operations, perform an XOR operation with the result and the next data in the message (function code, register address, data). Continue with steps 3 to 5 until the last data has been processed.
- The result of the last shift or XOR operation is the checksum.

The example in *Table C.3* shows the CRC-16 calculation of the slave address 02H and the function code 03H, yielding the result D140H.

Note: This example does not show the calculation for a complete MEMOBUS/Modbus command. Normally data would follow in the calculation.

Table C.3 CRC-16 Checksum Calculation Example

Description	Calculation	Overflow	Description	Calculation	Overflow
Initial Value (FFFFH)	1111 1111 1111 1111		Function Code 03H	0000 0000 0000 0011	
Address 02H	0000 0000 0000 0010		XOR w result	1000 0001 0011 1101	
XOR w initial value	1111 1111 1111 1101		Shift 1	0100 0000 1001 1110	1
Shift 1	0111 1111 1111 1110	1	XOR w A001H	1010 0000 0000 0001	
XOR w A001H	1010 0000 0000 0001		XOR result	1110 0000 1001 1111	
XOR result	1101 1111 1111 1111		Shift 2	0111 0000 0100 1111	1
Shift 2	0110 1111 1111 1111	1	XOR w A001H	1010 0000 0000 0001	
XOR w A001H	1010 0000 0000 0001		XOR result	1101 0000 0100 1110	
XOR result	1100 1111 1111 1110		Shift 3	0110 1000 0010 0111	0
Shift 3	0110 0111 1111 1111	0	Shift 4	0011 0100 0001 0011	0
Shift 4	0011 0011 1111 1111	1	XOR w A001H	1010 0000 0000 0001	
XOR w A001H	1010 0000 0000 0001		XOR result	1001 0100 0001 0010	
XOR result	1001 0011 1111 1110		Shift 5	0100 1010 0000 1001	0
Shift 5	0100 1001 1111 1111	0	Shift 6	0010 0101 0000 0100	1
Shift 6	0010 0100 1111 1111	1	XOR w A001H	1010 0000 0000 0001	
XOR w A001H	1010 0000 0000 0001		XOR result	1000 0101 0000 0101	
XOR result	1000 0100 1111 1110		Shift 7	0100 0010 1000 0010	1
Shift 7	0100 0010 0111 1111	0	XOR w A001H	1010 0000 0000 0001	
Shift 8	0010 0001 0011 1111	1	XOR result	1110 0010 1000 0011	
XOR w A001H	1010 0000 0000 0001		Shift 8	0111 0001 0100 0001	1
XOR result	1000 0001 0011 1110		XOR w A001H	1010 0000 0000 0001	
Perform operations with next data (function code)			XOR result	1101 0001 0100 0000	
			CRC-16	1101 0001 0100 0000	
				D140H	
			Continue from here with next data.		

■ Response Data

To be sure that the data is valid, perform a CRC-16 calculation on the response message data as described above. Compare the result to the CRC-16 checksum that was received within the response message. Both should match.

C.9 Message Examples

Below are some examples of command and response messages.

◆ Reading Drive MEMOBUS/Modbus Register Contents

Using the function code 03H (Read), a maximum of 16 MEMOBUS/Modbus registers can be read out at a time.

The following table shows message examples when reading status signals, error details, data link status, and frequency references from the slave 2 drive.

Command Message			Response Message (normal)			Response Message (fault)		
Slave Address		02H	Slave Address		02H	Slave Address		02H
Function Code		03H	Function Code		03H	Function Code		83H
Starting No.	Upper	00H	Data Quantity		08H	Error Code		03H
	Lower	20H	1st storage register	Upper	00H	CRC-16	Upper	F1H
Data Quantity	Upper	00H		Lower	65H		Lower	31H
	Lower	04H	Next storage register	Upper	00H			
CRC-16	Upper	45H		Lower	00H			
	Lower	F0H	Next storage register	Upper	00H			
				Lower	00H			
			Next storage register	Upper	01H			
				Lower	F4H			
			CRC-16	Upper	AFH			
				Lower	82H			

◆ Loopback Test

Function code 08H performs a loopback test. This test returns a response message with exactly the same content as the command message and can be used to check the communications between the master and slave. User-defined test code and data values can be set.

The following table shows a message example when performing a loopback test with the slave 1 drive.

Command Message			Response Message (normal)			Response Message (fault)		
Slave Address		01H	Slave Address		01H	Slave Address		01H
Function Code		08H	Function Code		08H	Function Code		89H
Test Code	Upper	00H	Test Code	Upper	00H	Error Code		01H
	Lower	00H		Lower	00H	CRC-16	Upper	86H
Data	Upper	A5H	Data	Upper	A5H		Lower	50H
	Lower	37H		Lower	37H			
CRC-16	Upper	DAH	CRC-16	Upper	DAH			
	Lower	8DH		Lower	8DH			

◆ Writing to Multiple Registers

Function code 10h allows the user to write multiple drive MEMOBUS/Modbus registers with one message. This process works similar to reading registers, i.e., the address of the first register that is to be written and the data quantity must be set in the command message. The data to be written must be consecutive so that the register addresses are in order, starting from the specified address in the command message. The data order must be high byte, then lower byte.

The following table shows an example of a message where a forward operation has been set with a frequency reference of 60.0 Hz for the slave 1 drive.

Command Message			Response Message (normal)			Response Message (fault)		
Slave Address		01H	Slave Address		01H	Slave Address		01H
Function Code		10H	Function Code		10H	Function Code		90H
Starting No.	Upper	00H	Starting No.	Upper	00H	Error Code		02H
	Lower	01H		Lower	01H	CRC-16	Upper	CDH
Data Quantity	Upper	00H	Data Quantity	Upper	00H		Lower	C1H
	Lower	02H		Lower	02H			
Number of Bytes		04H	CRC-16	Upper	10H			
Starting Data	Upper	00H		Lower	08H			
	Lower	01H						
Next Data	Upper	02H						
	Lower	58H						
CRC-16	Upper	63H						
	Lower	39H						

Note: For the number of bytes in the command message, take double the number of the data quantity.

C.10 MEMOBUS/Modbus Data Table

Table below lists all MEMOBUS/Modbus data. There are three types of data: command data, monitor data, and broadcast data.

◆ Command Data

It is possible to both read and write command data.

Note: Bits that are not used should be set to 0. Refrain from writing to reserved registers.

Register No.	Contents	
0000H	Reserved	
0001H	Operation Signals and Multi-function Inputs	
	bit 0	H5-12 = 0: Forward Run Command (0 = Stop, 1 = Forward Run) H5-12 = 1: Run Command (0 = Stop, 1 = Run)
	bit 1	H5-12 = 0: Reverse Run Command (0 = Stop, 1 = Reverse Run) H5-12 = 1: Forward/Reverse (0 = Forward, 1 = Reverse)
	bit 2	External Fault (EF0)
	bit 3	Fault Reset
	bit 4	Multi-Function Input 1 Function is ComRef when H1-01 = 40 (Forward/Stop). *Refer to d: Reference Settings on page 82* for ComRef explanations.
	bit 5	Multi-Function Input 2 Function is ComCtrl when H1-02 = 41 (Reverse/Stop). *Refer to d: Reference Settings on page 82* for ComCtrl explanations.
	bit 6	Multi-Function Input 3
	bit 7	Multi-Function Input 4
	bit 8	Multi-Function Input 5
	bit 9 to F	Reserved
0002H	Frequency Reference	Units are determined by parameter H5-13 (MEMOBUS frequency reference and frequency monitor unit).
0003H-0006H	Reserved	
0007H	Analog Output Terminal AM Setting (10 V / 4000 H)	
0008H	Reserved	
0009H	Settings for Multi-Function Digital Outputs	
	bit 0	Contact Output (terminal MA/MB-MC)
	bit 1 to F	Reserved
000AH-000EH	Reserved	
000FH	Control Selection Setting	
	bit 0 to B	Reserved
	bit C	Enable Terminal S5 Input for Broadcast Data
	bit D to F	Reserved

◆ Monitor Data

Monitor data can be read only.

Register No.	Contents	
0020H	Drive Status 1	
	bit 0	During Run
	bit 1	During Reverse
	bit 2	Drive Ready
	bit 3	Fault
	bit 4	Data Setting Error
	bit 5	Multi-Function Contact Output (terminal MA/MB-MC)
	bit 6 to bit D	Reserved
	bit E	ComRef status
	bit F	ComCtrl status
0021H	Fault Contents 1	
	bit 0	Overcurrent (oC)
	bit 1	Overvoltage (ov)
	bit 2	Drive Overload (oL2)
	bit 3	Overheat 1 (oH1)
	bit 4	Braking Resistor Overheat (rH)
	bit 5, 6	Reserved
	bit 7	EF0 to 5: External Fault
	bit 8	CPF□□: Hardware Fault (includes oFx)
	bit 9	Motor Overload (oL1), Overtorque Detection 1 (oL3)
	bit A	Reserved
	bit B	Main Circuit Undervoltage (Uv)
	bit C	Undervoltage (Uv1), Soft Charge Circuit Fault (Uv3)
	bit D	Output Phase Loss (LF), Input Phase Loss (PF)
	bit E	MEMOBUS/Modbus Communication Error (CE)
	bit F	Operator Connection Fault (oPr)
0022H	Data Link Status	
	bit 0	Writing data or switching motors
	bit 1	Reserved
	bit 2	
	bit 3	Upper or lower limit error
	bit 4	Data conformity error
	bit 5	Writing to EEPROM
	bit 6 to bit F	Reserved
0023H	Frequency Reference, <1>	
0024H	Output Frequency, <1>	
0025H	Output Voltage Reference, 0.1 V units	
0026H	Output Current	
0027H	Reserved	
0028H	Reserved	
0029H	Fault Contents 2	
	bit 0, 1	Reserved
	bit 2	Input Phase Loss (PF)
	bit 3	Output Phase Loss (LF)
	bit 4	Braking Resistor Overheat (rH)
	bit 5 to bit F	Reserved
002AH	Alarm Contents1	
	bit 0 to bit 1	Reserved
	bit 2	Run Command Input Error (EF)
	bit 3	Drive Baseblock (bb)
	bit 4	Overtorque Detection 1 (oL3)
	bit 5	Heatsink Overheat (oH)
	bit 6	Overvoltage (ov)
	bit 7	Undervoltage (Uv)
	bit 8	Reserved
	bit 9	MEMOBUS/Modbus Communication Error (CE)
	bit A to F	Reserved

Register No.	Contents	
002BH	Input Terminal Status	
	bit 0	Terminal S1 Closed
	bit 1	Terminal S2 Closed
	bit 2	Terminal S3 Closed
	bit 3	Terminal S4 Closed
	bit 4	Terminal S5 Closed
	bit 5 to bit F	Reserved
002CH	Drive Status 2	
	bit 0	During Run
	bit 1	Zero Speed
	bit 2	Speed Agree
	bit 3	User Speed Agree
	bit 4	Frequency Detection 1
	bit 5	Frequency Detection 2
	bit 6	Drive Ready
	bit 7	During Undervoltage
	bit 8	During Baseblock
	bit 9	Frequency Reference from Operator Keypad
	bit A	Run Command from Operator Keypad
	bit B	Overtorque
	bit C, D	Reserved
	bit E	Fault
	bit F	Communication Timeout
002DH	Output Terminal Status	
	bit 0	Multi-Function Contact Output (terminal MA/MB-MC)
	bit 1 to bit F	Reserved
002EH to 0030H	Reserved	
0031H	DC Bus Voltage, 1 Vdc units	
0032H to 0033H	Reserved	
0034H	Product Code 1 [ASCII], Product Type (J0 for J1000)	
0035H to 003CH	Reserved	
003DH	Communications Error Contents <2>	
	bit 0	CRC Error
	bit 1	Data Length Error
	bit 2	Reserved
	bit 3	Parity Error
	bit 4	Overrun Error
	bit 5	Framing Error
	bit 6	Timeout
	bit 7 to bit F	Reserved
003EH	Reserved	
003FH	Output Frequency	0.01% units
0040H to 007EH	Used for various monitors U1-□□. ***Refer to U: Monitors on page 183*** for parameter details.	
007FH	Alarm Code, ***Refer to Alarm Register Contents on page 206*** for alarm codes.	
0080H to 0097H	Used for monitors U2-□□. ***Refer to U: Monitors on page 183*** for parameter details and ***Refer to Fault History Contents on page 205*** for register value descriptions.	
0098H	High Word of Accumulated Operation Time Monitor (U4-01)	
0099H	Low Word of Accumulated Operation Time Monitor (U4-01)	
009AH to 009BH	Reserved	
00ABH	Drive Rated Current	
00ACH to 00B5H	Reserved	
00B6H	Frequency Reference After Soft-starter	0.01% units
00B7H	Reserved	
00B8H	Frequency Reference	0.01% units
00B9H to 00BEH	Reserved	
00BFH	oPE Error Number	

00C0H	Fault contents 1	
	bit 0	Reserved
	bit 1	Undervoltage (Uv1)
	bit 2	Reserved
	bit 3	Soft Charge Circuit Fault (Uv3)
	bit 4, 5	Reserved
	bit 6	Overcurrent (oC)
	bit 7	Overvoltage (ov)
	bit 8	Reserved
	bit 9	Heatsink Overheat (oH1)
	bit A	Motor Overload (oL1)
	bit B	Drive Overload (oL2)
	bit C	Overtorque Detection 1 (oL3)
	bit D, E	Reserved
	bit F	Braking Resistor Overheat (rH)
00C1H	Fault contents 2	
	bit 0	External Fault at input terminal S3 (EF3)
	bit 1	External Fault at input terminal S4 (EF4)
	bit 2	External Fault at input terminal S5 (EF5)
	bit 3 to 9	Reserved
	bit A	Input Phase Loss (PF)
	bit B, C	Reserved
	bit D	Digital Operator Connection Fault (oPr)
	bit E	EEPROM Write Error (Err)
	bit F	Reserved
00C2H	Fault contents 3	
	bit 0	MEMOBUS/Modbus Communication Error (CE)
	bit 1 to 5	Reserved
	bit 6	MEMOBUS/Modbus Communication Option External Fault (EF0)
	bit 7 to E	Reserved
	bit F	Hardware fault (includes oFx)
00C3H	Reserved	
00C4H	Fault contents 5	
	bit 0	Reserved
	bit 1	External Fault 1, input terminal S1 (EF1)
	bit 2	External Fault 2, input terminal S2 (EF2)
	bit 3, 4	Reserved
	bit 5	Current Offset Fault (CoF)
	bit 6 to F	Reserved
00C5H to 00C7H	Reserved	
00C8H	Alarm contents 2	
	bit 0	Undervoltage (Uv)
	bit 1	Overvoltage (ov)
	bit 2	Heatsink Overheat (oH)
	bit 3	Reserved
	bit 4	Overtorque 1 (oL3)
	bit 5	Reserved
	bit 6	Run Commands Input Error (EF)
	bit 7	Drive Baseblock (bb)
	bit 8	External Fault 3, input terminal S3 (EF3)
	bit 9	External Fault 4, input terminal S4 (EF4)
	bit A	External Fault 5, input terminal S5 (EF5)
	bit B to F	Reserved
00C9H	Alarm contents 3	
	bit 0, 1	Reserved
	bit 2	Digital Operator Connection Fault (oPr)
	bit 3	MEMOBUS/Modbus Communication Error (CE)
	bit 4	Reserved
	bit 5	Serial Communication Transmission Error (CALL)
	bit 6	Motor Overload (oL1)
	bit 7	Drive Overload (oL2)
	bit 8 to F	Reserved

00CBH	Alarm contents 5	
	bit 0 to 7	Reserved
	bit 8	External Fault 1 (input terminal S1) (EF1)
	bit 9	External Fault 2 (input terminal S2) (EF2)
	bit A to F	Reserved
00CCH-00CFH	Reserved	
00D0H	CPF Contents 1	
	bit 0, 1	Reserved
	bit 2	A/D Conversion Error (CPF02)
	bit 3 to 5	Reserved
	bit 6	EEPROM data fault (CPF06)
	bit 7	Reserved
	bit 8	EEPROM Serial Communications Fault (CPF08)
	bit 9 to A	Reserved
	bit B	RAM Fault (CPF11)
	bit C	FLASH Memory Fault (CPF12)
	bit D	Reserved
	bit E	Control Circuit Fault (CPF14)
	bit F	Reserved
00D1H	CPF Contents 2	
	bit 0	Reserved
	bit 1	Timing Fault (CPF17)
	bit 2	Control Circuit Fault (CPF18)
	bit 3 to 5	Reserved
	bit 6	A/D Conversion Fault (CPF22)
	bit 7	PWM Feedback Fault (CPF23)
	bit 8	Drive capacity signal fault (CPF24)
	bit 9 to F	Reserved
00D2H to 00FBH	Reserved	

<1> Units are determined by parameter H5-13.
<2> The contents of a communication error are saved until the fault is reset.

◆ Broadcast Messages

Data can be written from the master to all slave devices at the same time.

The slave address in a broadcast command message must be set to 00H. All slaves will receive the message, but will not respond.

Register No.	Contents	
0001H	Digital Input Command	
	bit 0	Forward Run (0: Stop 1: Run)
	bit 1	Direction Command (0: Forward, 1: Reverse)
	bit 2, 3	Reserved
	bit 4	External Fault (set by H1-01)
	bit 5	Fault Reset (set by H1-02)
	bit 6 to B	Reserved
	bit C	Multi-Function Digital Input S5
	bit D to F	Reserved
0002H	Frequency Reference	30000/100%

◆ Fault History Contents

The table below shows the fault codes that can be read out by MEMOBUS/Modbus commands from the U2-□□ monitor parameters.

Table C.4 Fault History Register Contents

Fault Code	Fault Name	Fault Code	Fault Name
0002H	Undervoltage (Uv1)	0042H	External Fault 1, input terminal S1 (EF1)
0004H	Soft Charge Circuit Fault (Uv3)	0043H	External Fault 2, input terminal S2 (EF2)
0007H	Overcurrent (oC)	0046H	Current Offset Fault (CoF)
0008H	Overvoltage (ov)	0083H	A/D Conversion Error (CPF02)
000AH	Heatsink Overheat (oH1)	0087H	Drive specification mismatch during Terminal Board or Control Board replacement (CPF06)
000BH	Motor Overload (oL1)	0089H	EEPROM Serial Communication Fault (CPF08)
000CH	Drive Overload (oL2)	008CH	RAM fault (CPF11)

000DH	Overtorque Detection 1 (oL3)	008DH	Flash memory circuit exception (CPF12)
0010H	Braking Resistor Overheat (rH)	008FH	Control Circuit Fault (CPF14)
0011H	External Fault at input terminal S3 (EF3)	0092H	Timing Fault (CPF17)
0012H	External Fault at input terminal S4 (EF4)	0093H	Control Circuit Fault (CPF18)
0013H	External Fault at input terminal S5 (EF5)	0095H	Hardware fault at power up (CPF20)
001BH	Input Phase Loss (PF)	0096H	Hardware fault at communication start up (CPF21)
001CH	Output Phase Loss (LF)	0097H	A/D Conversion Fault (CPF22)
001EH	Digital Operator Connection (oPr)	0098H	PWM Feedback Fault (CPF23)
001FH	EEPROM Write Error (Err)	0099H	Drive capacity signal fault (CPF24)
0021H	MEMOBUS/Modbus Communication Error (CE)	0101H	Option compatibility error (oFA00)
0027H	PROFIBUS-DP Option External Fault (EF0)		

◆ Alarm Register Contents

The table below shows the alarm codes that can be read out from MEMOBUS/Modbus register 007FH.

Table C.5 Alarm Register 007FH Contents

Alarm Code	Fault Name	Alarm Code	Fault Name
0001H	Undervoltage (Uv)	000BH	External Fault 5, input terminal S5 (EF5)
0002H	Overvoltage (ov)	0014H	MEMOBUS/Modbus Communication Error (CE)
0003H	Heatsink Overheat (oH)	0017H	Motor Overload (oL1)
0005H	Overtorque 1 (oL3)	0018H	Drive Overload (oL2)
0007H	Run commands input error (EF)	0020H	MEMOBUS/Modbus Test Mode Fault (SE)
0008H	Drive Baseblock (bb)	0039H	External Fault (input terminal S1) (EF1)
0009H	External Fault 3, input terminal S3 (EF3)	003AH	External Fault (input terminal S2) (EF2)
000AH	External Fault 4, input terminal S4 (EF4)		

C.11 Changing Drive Parameters

This section describes how the drive handles parameter changes by MEMOBUS/Modbus.

◆ Drive Operations on Parameter Change

When drive parameters are changed by MEMOBUS/Modbus communication, the drive performs the following operations:

- The upper/lower limit of the parameter changed is checked. If the new value is out of range, the old value remains active.
- Parameter settings are refreshed in the RAM, i.e., the parameter change is activated immediately.
- The default settings of related parameters are changed.
- If multiple registers are written and only one data is invalid, all data sent are discarded.

If no Enter command is sent, parameter changes will be lost if the power is switched off.

◆ Issuing an Enter Command

If parameters are changed from a PLC using MEMOBUS/Modbus communication the values are changed in the drive RAM only. When the power is turned off all changes will be lost. An Enter command can be sent to save changes in the EEPROM (non-volatile memory) and thereby prevent the loss of parameter settings. In order to perform an Enter command "0" must be written in register number 900H. This register is "write only".

Table C.6 Enter Command

Register No.	Description
0900H	Writes data into the EEPROM (non-volatile memory). Parameter changes remain even if the power supply is cycled.

Note: Because the EEPROM can be written to a maximum of 100,000 times, refrain from writing to the EEPROM too often. The Enter command registers are write-only. Consequently, if these registers are read, then the register address will be invalid (Error code: 02H). An Enter command is not required if reference or broadcast data are sent to the drive.

C.12 Communication Errors

◆ MEMOBUS/Modbus Error Codes

A list of MEMOBUS/Modbus errors appears below.

When an error occurs, remove whatever caused the error and restart communications.

Error Code	Error Name Cause
01H	Function Code Error
	• Attempted to set a function code from a PLC other than 03H, 08H, and 10H.
02H	Register Number Error
	• A register number specified in the command message does not exist. • Attempted to send a broadcast message using other register numbers than 0001H or 0002H.
03H	Bit Count Error
	• Read data or write data is greater than 16 bits. Invalid command message quantity. • In a write message, the “Number of Data Items” contained within the message does not equal twice the amount of data words (i.e., the total of Data 1+ Data 2, etc.).
21H	Data Setting Error
	• Control data or parameter write data is outside the allowable setting range. • Attempted to write a contradictory parameter setting.
22H	Write Mode Error
	• Attempted to write while the drive was operating to a parameter that cannot be written to during run. • During an EEPROM data error (CPF06), the master attempted to write to a parameter other than A1-00 to -05, E1-03, or o2-04. • Attempted to write to read-only data.
23H	DC Bus Undervoltage Write Error
	• Attempted to write from the master during an undervoltage fault (Uv1). • Attempted to execute and Enter command during Uv1.
24H	Write Error During Parameter Process
	• Master attempted writing to the drive while the drive was processing parameter data.

◆ Slave Not Responding

In the following situations, the slave drive will ignore the command message sent from the master, and not send a response message:

- When a communications error (overrun, framing, parity or CRC-16) is detected in the command message.
- When the slave address in the command message and the slave address in the drive do not match (remember to set the slave address for the drive using H5-01).
- When the gap between two blocks (8 bit) of a message exceeds 24 bits.
- When the command message data length is invalid.

Note: If the slave address specified in the command message is 00H, all slaves execute the write function, but do not return response messages to the master.

C.13 Self-Diagnostics

The drive has a built-in self-diagnosing function of the serial communication interface circuits. To perform the self-diagnosis function, use the following procedure.

DANGER! *Electrical Shock Hazard. Do not connect or disconnect wiring while the power is on. Failure to comply will result in death or serious injury. Before servicing, disconnect all power to the equipment. The internal capacitor remains charged even after the power supply is turned off. The charge indicator LED will extinguish when the DC bus voltage is below 50 Vdc. To prevent electric shock, wait at least one minute after all indicators are OFF and measure the DC bus voltage level to confirm safe level.*

1. Turn on the power to the drive.
2. Note the present terminal S5 function selection setting (H1-05) and set it for the communications test mode (H1-05 = 67).
3. Turn off the power to the drive.
4. With the power off, wire the drive as shown in the figures below.
5. Check and note the setting of DIP switch S3. Set it to NPN if it is in the PNP position.
6. Attach the SI-485/J option to the drive. Wire R+ and S+, R- and S-.

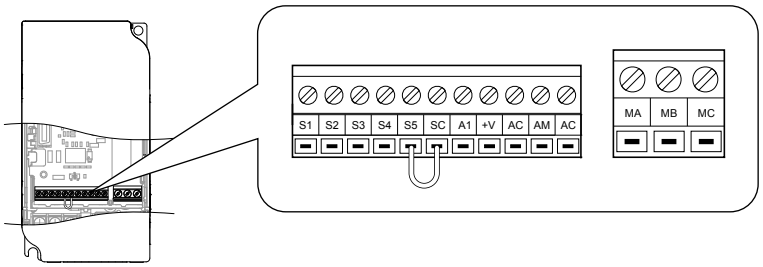

Figure C.9 Terminal Connections for Communication Self-Diagnostics

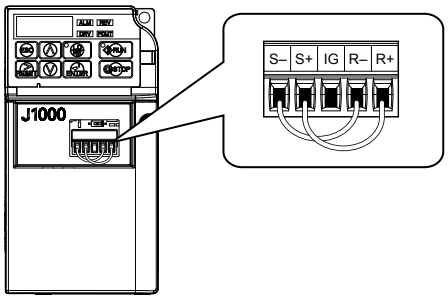

Figure C.10 Terminal Connections for Communication Self-Diagnostics

7. Turn on the drive.
8. During normal operation, the drive will display PASS. This indicates that the communications test mode is operating normally.

   When a fault occurs, the drive will display “CE” on the keypad display.
9. Turn off the power supply.
10. Remove the wire jumpers from terminal R+, R-, S+, S- and, S5-SC and set back DIP switch S3 to its original position. Set terminal S5 to its original function.
11. Return to normal operation.

This Page Intentionally Blank

Appendix: D

Standards Compliance

This appendix explains the guidelines and criteria for maintaining CE and UL standards.

D.1 SECTION SAFETY.....212
D.2 EUROPEAN STANDARDS.....214
D.3 UL STANDARDS.....219
D.4 USER SETTING TABLE.....222

D.1 Section Safety

⚠ DANGER

Electrical Shock Hazard

Do not connect or disconnect wiring while the power is on.

Failure to comply will result in death or serious injury.

⚠ WARNING

Electrical Shock Hazard

Do not operate equipment with covers removed.

Failure to comply could result in death or serious injury.

The diagrams in this section may show drives without covers or safety shields to show details. Be sure to reinstall covers or shields before operating the drives and run the drives according to the instructions described in this manual.

Always ground the motor-side grounding terminal.

Improper equipment grounding could result in death or serious injury by contacting the motor case.

Do not touch any terminals before the capacitors have fully discharged.

Failure to comply could result in death or serious injury.

Before wiring terminals, disconnect all power to the equipment. The internal capacitor remains charged even after the power supply is turned off. The charge indicator LED will extinguish when the DC bus voltage is below 50 Vdc. To prevent electric shock, wait at least one minute after all indicators are off and measure the DC bus voltage level to confirm safe level.

⚠ WARNING

Do not allow unqualified personnel to perform work on the drive.

Failure to comply could result in death or serious injury.

Installation, maintenance, inspection, and servicing must be performed only by authorized personnel familiar with installation, adjustment and maintenance of AC drives.

Do not perform work on the drive while wearing loose clothing, jewelry or without eye protection.

Failure to comply could result in death or serious injury.

Remove all metal objects such as watches and rings, secure loose clothing, and wear eye protection before beginning work on the drive.

Do not remove covers or touch circuit boards while the power is on.

Failure to comply could result in death or serious injury.

⚠ WARNING

Fire Hazard

Tighten all terminal screws to the specified tightening torque.

Loose electrical connections could result in death or serious injury by fire due to overheating of electrical connections.

Do not use an improper voltage source.

Failure to comply could result in death or serious injury by fire.

Verify that the rated voltage of the drive matches the voltage of the incoming power supply before applying power.

Do not use improper combustible materials.

Failure to comply could result in death or serious injury by fire.

Attach the drive to metal or other noncombustible material.

NOTICE

Observe proper electrostatic discharge procedures (ESD) when handling the drive and circuit boards.

Failure to comply may result in ESD damage to the drive circuitry.

Never connect or disconnect the motor from the drive while the drive is outputting voltage.

Improper equipment sequencing could result in damage to the drive.

Do not use unshielded cable for control wiring.

Failure to comply may cause electrical interference resulting in poor system performance. Use shielded twisted-pair wires and ground the shield to the ground terminal of the drive.

Do not allow unqualified personnel to use the product.

Failure to comply could result in damage to the drive or braking circuit.

Carefully review instruction manual TOBPC72060000 when connecting a braking option to the drive.

Do not modify the drive circuitry.

Failure to comply could result in damage to the drive and will void warranty.

Yaskawa is not responsible for modification of the product made by the user. This product must not be modified.

Check all the wiring to ensure that all connections are correct after installing the drive and connecting other devices.

Failure to comply could result in damage to the drive.

D.2 European Standards

Figure D.1 CE Mark

The CE mark indicates compliance with European safety and environmental regulations and is required for engaging in business and commerce in Europe.

European standards include the Machinery Directive for machine manufacturers, the Low Voltage Directive for electronics manufacturers and the EMC guidelines for controlling noise.

This drive displays the CE mark based on the EMC guidelines and the Low Voltage Directive.

- **EMC Guidelines:** 2004/108/EC
- **Low Voltage Directive:** 2006/95/EC

◆ CE Low Voltage Directive Compliance

This drive has been tested according to IEC61800-5-1:2007, and it fully complies with the Low Voltage Directive.

To comply with the Low Voltage Directive, be sure to meet the following conditions when combining this drive with other devices:

■ Area of Use

Do not use drives in areas with pollution higher than severity 2 and overvoltage category 3 in accordance with IEC664.

■ Installing Fuses on the Input Side

Always install input fuses. Select fuses according to *Table D.1*.

Table D.1 Recommended Input Fuse Selection

Drive Model CIMR-J□	Class T Fuses	
	Model	Fuse Ampere Rating
200 V Class Single-Phase Drives		
BA0001	A6T15	15
BA0002	A6T20	20
BA0003	A6T20	20
BA0006	A6T40	40
BA0010	A6T40	40
200 V Class Three-Phase Drives		
2A0001	A6T10	10
2A0002	A6T10	10
2A0004	A6T15	15
2A0006	A6T20	20
2A0010	A6T25	25
2A0012	A6T30	30
2A0020	A6T40	40
400 V Class Three-Phase Drives		
4A0001	A6T10	10
4A0002	A6T10	10
4A0004	A6T20	20
4A0005	A6T25	25
4A0007	A6T25	25
4A0009	A6T25	25
4A0011	A6T30	30

■ Grounding

The drive is designed to be used in T-N (grounded neutral point) networks. If installing the drive in other types of grounded systems, contact your dealer or Yaskawa for instructions.

◆ EMC Guidelines Compliance

This drive is tested according to IEC61800-3:2004 and it complies with the EMC guidelines.

■ EMC Filter Installation

The following conditions must be met to ensure continued compliance with guidelines. *Refer to EMC Filters on page 217* for EMC filter selection.

Installation Method

Verify the following installation conditions to ensure that other devices and machinery used in combination with this drive also comply with EMC guidelines.

1. Install an EMC noise filter to the input side specified by Yaskawa for compliance with European standards.
2. Place the drive and EMC noise filter in the same enclosure.
3. Use braided shield cable for the drive and motor wiring or run the wiring through a metal conduit.
4. Keep wiring as short as possible. Ground the shield on both the drive side and the motor side.

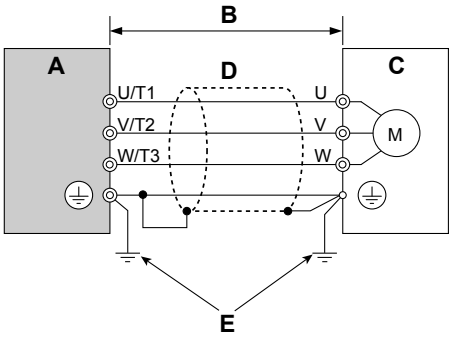

A – Drive
B – 20 m max cable length between drive and motor
C – Motor
D – Metal conduit
E – Ground wire should be as short as possible.

Figure D.2 Installation Method

5. Ground the largest possible surface area of the shield to the metal conduit when using braided shield cable. Yaskawa recommends using a cable clamp.

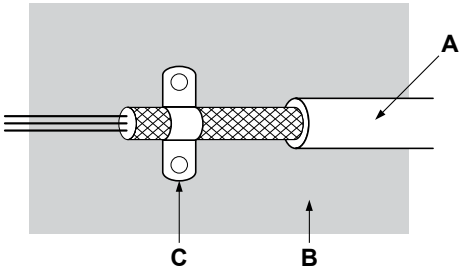

A – Braided shield cable
B – Metal panel
C – Cable clamp (conductive)

Figure D.3 Ground Area

Three-Phase 200 V / 400 V Class

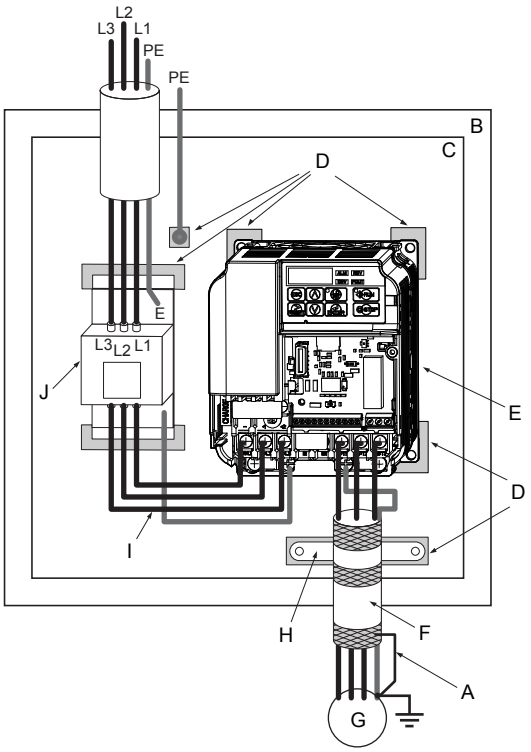

A – Ground the cable shield
B – Enclosure panel
C – Metal plate
D – Grounding surface (remove any paint or sealant)
E – Drive
F – Motor cable (braided shield cable, max. 20 m)
G – Motor
H – Cable clamp
I – Max. distance between drive and noise filter
J – EMC noise filter

Figure D.4 EMC Filter and Drive Installation for CE Compliance (Three-Phase 200 V / 400 V Class)

Single-Phase 200 V Class

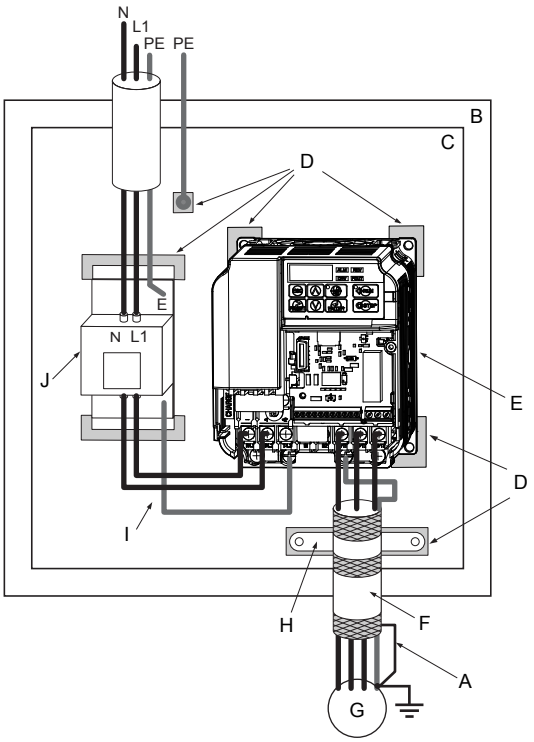

A – Ground the cable shield
B – Enclosure panel
C – Metal plate
D – Grounding surface (remove any paint or sealant)
E – Drive
F – Motor cable (braided shield cable, max. 20 m)
G – Motor
H – Cable clamp
I – Wiring distance as short as possible
J – EMC noise filter

Figure D.5 EMC Filter and Drive Installation for CE Compliance (Single-Phase 200 V Class)

■ EMC Filters

The drive should be installed with the EMC filters listed below in order to comply with the EN 61800-3, category C1 requirements.

Table D.2 EN 61800-3 Category C1 Filters

Drive CIMR-J□	Filter Data (Manufacturer: Schaffner)						
	Type	Rated Current (A)	Weight (kg)	Dimensions [W x L x H] (mm)	Y x X	Drive Mounting Screw A	Filter Mounting Screw
200 V Single-Phase Units							
BA0001	FS23638-10-07	10	0.44	71 x 169 x 45	51 x 156	M4	M5
BA0002	FS23638-10-07	10	0.44	71 x 169 x 45	51 x 156	M4	M5
BA0003	FS23638-10-07	10	0.44	71 x 169 x 45	51 x 156	M4	M5
BA0006	FS23638-20-07	20	0.75	111 x 169 x 50	91 x 156	M4	M5
BA0010	FS23638-20-07	20	0.75	111 x 169 x 50	91 x 156	M4	M5
200 V Three-Phase Units							
2A0001	FS23637-8-07	7.3	0.4	71 x 169 x 40	51 x 156	M4	M5
2A0002	FS23637-8-07	7.3	0.4	71 x 169 x 40	51 x 156	M4	M5
2A0004	FS23637-8-07	7.3	0.4	71 x 169 x 40	51 x 156	M4	M5
2A0006	FS23637-8-07	7.3	0.4	71 x 169 x 40	51 x 156	M4	M5
2A0010	FS23637-14-07	14	0.6	111 x 169 x 45	91 x 156	M4	M5
2A0012	FS23637-14-07	14	0.6	111 x 169 x 45	91 x 156	M4	M5
2A0020	FS23637-24-07	24	0.9	144 x 174 x 50	120 x 161	M4	M5
400 V Three-Phase Units							
4A0001	FS23639-5-07	5	0.5	111 x 169 x 45	91 x 156	M4	M5
4A0002	FS23639-5-07	5	0.5	111 x 169 x 45	91 x 156	M4	M5
4A0004	FS23639-5-07	5	0.5	111 x 169 x 45	91 x 156	M4	M5
4A0005	FS23639-10-07	10	0.7	111 x 169 x 45	91 x 156	M4	M5
4A0007	FS23639-10-07	10	0.7	111 x 169 x 45	91 x 156	M4	M5
4A0009	FS23639-10-07	10	0.7	111 x 169 x 45	91 x 156	M4	M5

Drive CIMR-J□	Filter Data (Manufacturer: Schaffner)						
	Type	Rated Current (A)	Weight (kg)	Dimensions [W x L x H] (mm)	Y x X	Drive Mounting Screw A	Filter Mounting Screw
4A0011	FS23639-15-07	15	0.9	144 x 174 x 50	120 x 161	M4	M5

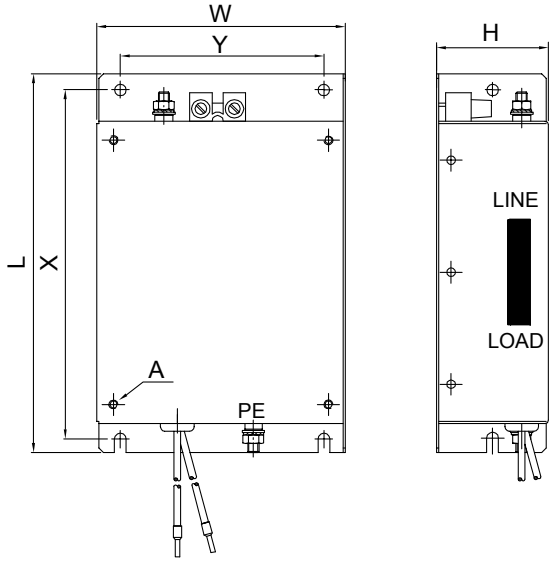

Figure D.6 EMC Filter Dimensions

■ DC Reactors for EN 61000-3-2 Compliance

Table D.3 DC Reactors for Harmonics Reduction

Drive Model CIMR-J□	DC Reactor	
	Model	Rating
200V Single-Phase Units		
BA0001	3.5 A	30 mH
BA0002		
BA0003	6.7 A	25 mH
400 V Three-Phase Units		
4A0001	3.5 A	3.0 mH
4A0002	2.7 A	12.5 mH

Note: Contact Yaskawa for information about DC reactors for other models.

D.3 UL Standards

The UL/cUL mark applies to products in the United States and Canada indicates that UL has performed product testing and evaluation and determined that their stringent standards for product safety have been met. For a product to receive UL certification, all components inside that product must also receive UL certification.

Figure D.7 UL/cUL Mark

◆ UL Standards Compliance

This drive is tested in accordance with UL standard UL508C, E131457 and complies with UL requirements. The following conditions must be met to maintain compliance when using this drive in combination with other equipment:

■ Installation Area

Do not install the drive to an area greater than pollution severity 2 (UL standard).

■ Main Circuit Terminal Wiring

Yaskawa recommends using UL-listed copper wires (rated at 75 °C) and closed-loop connectors or CSA-certified ring connectors sized for the selected wire gauge to maintain proper clearances when wiring the drive. Use the correct crimp tool to install connectors per manufacturer recommendation. *Table D.4* lists a suitable closed-loop connector manufactured by JST Corporation.

Table D.4 Closed-Loop Crimp Terminal Size (JIS C 2805) (same for 200 V and 400 V)

Wire Gauge mm² (AWG)	Terminal Screws	Crimp Terminal Model Numbers	Tightening Torque N m (lb to in.)
0.75 (18)	M3.5	R1.25-3.5	0.8 to 1.0 (7.1 to 8.9)
	M4	R1.25-4	1.2 to 1.5 (10.6 to 13.3)
1.25 (16)	M3.5	R1.25-3.5	0.8 to 1.0 (7.1 to 8.9)
	M4	R1.25-4	1.2 to 1.5 (10.6 to 13.3)
2 (14)	M3.5	R2-3.5	0.8 to 1.0 (7.1 to 8.9)
	M4	R2-4	1.2 to 1.5 (10.6 to 13.3)
3.5/5.5 (12/10)	M4	R5.5-4	1.2 to 1.5 (10.6 to 13.3)

Note: Use crimp insulated terminals or insulated shrink tubing for wiring connections. Wires should have a continuous maximum allowable temperature of 75 °C 600 Vac UL-approved vinyl-sheathed insulation.

Table D.5 Recommended Input Fuse Selection

Drive Model CIMR-J□	Class T Fuses		Class L Fuses	
	Model	Fuse Ampere Rating	Model	Fuse Ampere Rating
200 V Class Single-Phase Drives				
BA0001	A6T15	15	CR6L-20/UL	20
BA0002	A6T20	20	CR6L-30/UL	30
BA0003	A6T20	20	CR6L-50/UL	50
BA0006	A6T40	40	CR6L-75/UL	75
BA0010	A6T40	40	CR6L-100/UL	100
200 V Class Three-Phase Drives				
2A0001	A6T10	10	CR6L-20/UL	20
2A0002	A6T10	10	CR6L-20/UL	20
2A0004	A6T15	15	CR6L-20/UL	20
2A0006	A6T20	20	CR6L-30/UL	30
2A0010	A6T25	25	CR6L-50/UL	50
2A0012	A6T30	30	CR6L-50/UL	50
2A0020	A6T40	40	CR6L-75/UL	75
400 V Class Three-Phase Drives				
4A0001	A6T10	10	CR6L-20/UL	20
4A0002	A6T10	10	CR6L-20/UL	20
4A0004	A6T20	20	CR6L-50/UL	50
4A0005	A6T25	25	CR6L-50/UL	50
4A0007	A6T25	25	CR6L-50/UL	50
4A0009	A6T25	25	CR6L-50/UL	50

Drive Model CIMR-J□	Class T Fuses		Class L Fuses	
	Model	Fuse Ampere Rating	Model	Fuse Ampere Rating
4A0011	A6T30	30	CR6L-50/UL	50

■ Low Voltage Wiring for Control Circuit Terminals

Wire low voltage wires with NEC Class 1 circuit conductors. Refer to national state or local codes for wiring. Use a class 2 (UL regulations) power supply for the control circuit terminal.

Table D.6 Control Circuit Terminal Power Supply

Input / Output	Terminal Signal	Power Supply Specifications
Multi-function digital inputs	S1, S2, S3, S4, S5, SC	Use the internal power supply of the drive. Use class 2 for external power supply.
Main frequency reference	+V, A1, AC	Use the internal power supply of the drive. Use class 2 for external power supply.

■ Drive Short-Circuit Rating

This drive has undergone the UL short-circuit test, which certifies that during a short circuit in the power supply the current flow will not rise above 30,000 amps maximum at 240 V for 200 V class drives and 480 V for 400 V class drives.

- The MCCB and breaker protection and fuse ratings shall be equal to or greater than the short-circuit tolerance of the power supply being used.
- Suitable for use on a circuit capable of delivering not more than 30,000 RMS symmetrical amperes for 240 V in 200 V class drives (up to 480 V for 400 V class drives) motor overload protection.

◆ Drive Motor Overload Protection

Set parameter E2-01 (motor rated current) to the appropriate value to enable motor overload protection. The internal motor overload protection is UL listed and in accordance with the NEC and CEC.

■ E2-01 Motor Rated Current

Setting Range: Model Dependent

Default Setting: Model Dependent

Parameter E2-01 (motor rated current) protects the motor if parameter L1-01 is not set to 0 (default is 1, standard induction motor protection enabled).

■ L1-01 Motor Overload Protection Selection

The drive has an electronic overload protection function (oL1) based on time, output current and output frequency, which protects the motor from overheating. The electronic thermal overload function is UL-recognized, so it does not require an external thermal overload relay for single motor operation.

This parameter selects the motor overload curve used according to the type of motor applied.

Table D.7 Overload Protection Settings

Setting	Description
0	Disabled
1	Std Fan Cooled (< 10:1 motor) (default setting)
2	Standard Blower Cooled (10:1 motor)

Disable the electronic overload protection (L1-01 = 0: Disabled) and wire each motor with its own motor thermal overload when connecting the drive to more than one motor for simultaneous operation.

Enable the motor overload protection (L1-01 = “1” or “2”) when connecting the drive to a single motor unless there is another means of preventing motor thermal overload. The electronic thermal overload function causes an oL1 fault, which shuts off the output of the drive and prevents additional overheating of the motor. The motor temperature is continually calculated as long as the drive is powered up.

Setting L1-01 = 1 selects a motor with limited cooling capability below rated (base) speed when running at 100% load. The oL1 function derates the motor when it is running below base speed.

Setting L1-01 = 2 selects a motor capable of cooling itself over a 10:1 speed range when running at 100% load. The oL1 function derates the motor when it is running at 1/10 or less of its rated speed.

■ L1-02 Motor Overload Protection Time

Setting Range: 0.1 to 5.0 Minutes

Factory Default: 1.0 Minutes

The L1-02 parameter sets the allowed operation time before the oL1 fault occurs when the drive is running at 60 Hz and 150% of the full load amp rating (E2-01) of the motor. Adjusting the value of L1-02 can shift the set of oL1 curves up the Y-axis of the diagram below but will not change the shape of the curves.

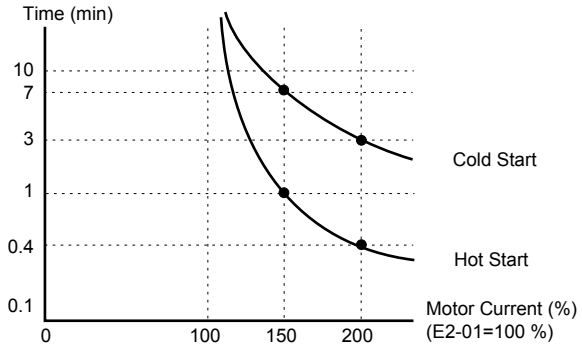

Figure D.8 Motor Overload Protection Time

D.4 User Setting Table

No.	Name	User Setting
A1-01	Access Level Selection	
A1-03	Initialize Parameters	
A1-04	Password 1	
A1-05	Password 2	
b1-01	Frequency Reference Selection 1	
b1-02	Run Command Selection 1	
b1-03	Stopping Method Selection	
b1-04	Reverse Operation Selection	
b1-07	Local/Remote Run Selection	
b1-08	Run Command Selection while in Programming Mode	
b1-14	Phase Order Selection	
b1-17	Run Command at Power Up	
b2-02	DC Injection Braking Current	
b2-03	DC Injection Braking Time/DC Excitation Time at Start	
b2-04	DC Injection Braking Time at Stop	
C1-01	Acceleration Time 1	
C1-02	Deceleration Time 1	
C1-03	Acceleration Time 2	
C1-04	Deceleration Time 2	
C1-09	Fast-Stop Time	
C2-01	S-Curve Characteristic at Accel Start	
C2-02	S-Curve Characteristic at Accel End	
C2-03	S-Curve Characteristic at Decel Start	
C2-04	S-Curve Characteristic at Decel End	
C3-01	Slip Compensation Gain	
C3-02	Slip Compensation Primary Delay Time	
C4-01	Torque Compensation Gain	
C6-01	Duty Mode Selection	
C6-02	Carrier Frequency Selection	
C6-03	Carrier Frequency Upper Limit	
C6-04	Carrier Frequency Lower Limit	
C6-05	Carrier Frequency Proportional Gain	
d1-01	Frequency Reference 1	
d1-02	Frequency Reference 2	
d1-03	Frequency Reference 3	
d1-04	Frequency Reference 4	
d1-05	Frequency Reference 5	
d1-06	Frequency Reference 6	
d1-07	Frequency Reference 7	
d1-08	Frequency Reference 8	
d1-17	Jog Frequency Reference	
d2-01	Frequency Reference Upper Limit	
d2-02	Frequency Reference Lower Limit	
d3-01	Jump Frequency 1	
d3-02	Jump Frequency 2	
d3-04	Jump Frequency Width	
d4-01	Frequency Reference Hold Function Selection	
E1-01	Input Voltage Setting	
E1-03	V/f Pattern Selection	
E1-04	Max Output Frequency	
E1-05	Max Voltage	
E1-06	Base Frequency	
E1-07	Mid Output Frequency	
E1-08	Mid Output Frequency Voltage	
E1-09	Minimum Output Frequency	
E1-10	Minimum Output Frequency Voltage	
E2-01	Motor Rated Current	
E2-02	Motor Rated Slip	
E2-03	Motor No-Load Current	

No.	Name	User Setting
E2-05	Motor Line-to-Line Resistance	
H1-01	Multi-Function Digital Input Terminal S1 Function Selection	
H1-02	Multi-Function Digital Input Terminal S2 Function Selection	
H1-03	Multi-Function Digital Input Terminal S3 Function Selection	
H1-04	Multi-Function Digital Input Terminal S4 Function Selection	
H1-05	Multi-Function Digital Input Terminal S5 Function Selection	
H2-01	Terminal MA, MB and MC Function Selection (relay)	
H3-01	Terminal A1 Signal Level Selection	
H3-03	Terminal A1 Gain Setting	
H3-04	Terminal A1 Bias Setting	
H3-13	Analog Input Filter Time Constant	
H4-01	Multi-Function Analog Output (Terminal AM Monitor Selection)	
H4-02	Multi-Function Analog Output (Terminal AM Output Gain)	
H4-03	Multi-Function Analog Output (Terminal AM Output Bias)	
H5-01	Drive Node Address	
H5-02	Communication Speed Selection	
H5-03	Communication Parity Selection	
H5-04	Stopping Method After Communication Error	
H5-05	Communication Fault Detection Selection	
H5-06	Drive Transmit Wait Time	
H5-07	RTS Control Selection	
H5-12	Run Command Method Selection	
H5-13	MEMOBUS Frequency Reference and Frequency Monitor Unit	
L1-01	Motor Overload Protection Selection	
L1-02	Motor Overload Protection Time	
L1-13	Continuous Electrothermal Operation Selection	
L2-01	Momentary Power Loss Operation Selection	
L3-01	Stall Prevention Selection during Accel.	
L3-02	Stall Prevention Level during Accel.	
L3-04	Stall Prevention Selection during Deceleration	
L3-05	Stall Prevention Selection during Run	
L3-06	Stall Prevention Level during Run	
L4-01	Speed Agreement Detection Level	
L4-07	Frequency Detection Conditions	
L5-01	Number of Auto Restart Attempts	
L6-01	Torque Detection Selection 1	
L6-02	Torque Detection Level 1	
L6-03	Torque Detection Time 1	
L8-01	Internal Dynamic Braking Resistor Protection Selection (ERF type)	
L8-05	Input Phase Loss Protection Selection	
L8-10	Heatsink Cooling Fan Operation Selection	
L8-12	Ambient Temperature Setting	
L8-18	Soft CLA Selection	
L8-35	Side-by-Side Selection	
L8-38	Carrier Frequency Reduction	
n1-02	Hunting Prevention Gain Setting	
n3-13	Overexcitation Deceleration Gain	
o1-02	User Monitor Selection After Power Up	
o1-03	Digital Operator Display Selection	
o2-02	STOP Key Function Selection	

No.	Name	User Setting
o2-04	Drive/kVA Selection	
o2-05	Frequency Reference Setting Method Selection	
o2-09	Initialization Mode	
o3-01	Copy Function Selection	
o3-02	Copy Allowed Selection	
o4-01	Accumulated Operation Time Setting	

No.	Name	User Setting
o4-02	Accumulated Operation Time Selection	
o4-03	Cooling Fan Maintenance Setting (Operation Time)	
o4-05	Capacitor Maintenance Setting	
o4-07	Inrush Prevention Relay Maintenance Setting	
o4-09	IGBT Maintenance Setting	
o4-11	U2, U3 Initial Value Selection	

This Page Intentionally Blank

Index

Numerics

3-Wire Sequence Example 33

B

Baseblock 131
Baseblock Command (N.C.) 177
Baseblock Command (N.O.) 177
Base Frequency 127
Braking Resistor 47
Braking Resistor, Installation 47
Braking Resistor Overheat 129
Buzzing Sound from Motor at 2 kHz 139

C

C1-01 ..... 60, 140
C1-01, -03, -05, -07 127
C1 Acceleration and Deceleration Times 174
C2-01 174
C2-01 through C2-04 ..... 122, 127
C2-02 174
C2-03 174
C2-04 174
C2 S-Curve Characteristics 174
C3-01 122
C3 Slip Compensation 174
C4-01 ..... 122, 127, 128, 136
C4 Torque Compensation 174
C6-01 ..... 122, 174
C6-02 ..... 49, 122, 127, 128, 138, 139, 140, 175
C6-03 175
C6-04 175
C6-05 ..... 139, 175
C6 Carrier Frequency 174
Cable Length Between Drive and Motor 38
CALL 124, 131
Cannot Change Parameter Settings 136
Can Not Reset 124, 131
Capacitor Maintenance Setting 183
Carrier Frequency Lower Limit 175
Carrier Frequency Proportional Gain 175
Carrier Frequency Reduction 181
Carrier Frequency Selection 122, 175
Carrier Frequency Setting Error 124, 134
Carrier Frequency Upper Limit 175
CE 123, 124, 125, 131
CE mark 214
CoF 123, 125
Comm. Fault Detection Selection 179
Communication Parity Selection 179
Communication Speed Selection 179
Communications Test Mode 178
Connected Machinery Vibrates When Motor Rotates 139
Control Circuit Fault 123
Control Circuit Input Terminals 40
Control Circuit Terminal Block Functions 40
Control Circuit Terminal Configuration 41
Cooling Fan Maintenance Setting (Operation Time) 183
Cooling Fan Replacement 132
CPF02 125
CPF06 125
CPF08 125
CPF20 ..... 123, 125
CPF21 ..... 123, 125
CPF22 ..... 123, 126
CPF23 ..... 123, 126
CPF24 ..... 123, 126
CrST 124, 131
C Tuning 174
Current Offset Fault 123, 125

Drive Motor Overload Protection 220
Drive Short-Circuit Rating 220
European Standards 14
Low Voltage Wiring 220
UL Standards 14

G

General Safety Information 11
Ground Fault Interrupter Activates When Drive is Running 140
Ground Wiring 38

H

H1-01 177
H1-02 177
H1-03 177
H1-04 177
H1-05 ..... 33, 177
H1 Multi-Function Digital Input 177
H1 Multi-Function Digital Input Selections 177
H2 Multi-Function Digital Outputs 178
H2 Multi-Function Digital Output Settings 178
H3-01 ..... 46, 136, 178
H3-01 Details 46
H3-13 ..... 122, 139
H3 Analog Input A1 178
H4 Multi-Function Analog Output AM 179
H5-01 179
H5-02 179
H5-03 179
H5-04 ..... 126, 179
H5-05 179

H5-06 179
H5-07 179
H5-12 179
H5-13 179
H5 MEMOBUS/Modbus Communications 179
Heatsink Cooling Fan Operation Selection 181
Heavy Duty Ratings 164
Hunting Prevention Gain 122

I

I/O Connections 32
IGBT Maintenance Setting 183
Input Phase Loss 123, 129
Input Terminals 60
Input Voltage Setting 176
Inrush Prevention Circuit Fault 129
Inrush Prevention Relay Maintenance Setting 183
Inspection 144, 145
Installation Environment 26
Installation Orientation 27
Installing Multiple Drives 27
Internal Dynamic Braking Resistor Protection Selection (ERF type) 181

J

Jog Frequency Reference 175
Jog Reference Selection 177
Jump Frequency 122
Jump Frequency 1 176
Jump Frequency 2 176
Jump Frequency Width 176

M

Magnetic Flux Compensation Capacity 174
Main Circuit Connection Diagram 34, 39
Main Circuit Terminal Functions 37
Main Circuit Terminal Power Supply 38
Main Circuit Terminal Wiring 21, 219
Main Frequency Reference 46
Maintenance 146
Master Speed Reference Lower Limit 175
Max Output Frequency 176
MEMOBUS/Modbus Communication Error 123, 124, 125, 131
MEMOBUS/Modbus Communications Test Mode Complete 132
MEMOBUS/Modbus Communications Test Mode Error 133
MEMOBUS/Modbus Error Code 184
MEMOBUS/Modbus Test Mode Complete 124
Mid Output Voltage A 122
Minimum Output Frequency 139, 140
Minimum Output Voltage 122
Minor Alarms 123
Minor Faults 123
Modes 57
Momentary Power Loss Operation Selection 180
Motor Does Not Operate When an External Run Command is Input 140
Motor Does Not Operate When the RUN Button on the Digital Operator is Pressed 139
Motor Does Not Rotate 136
Motor Hunting and Oscillation Control Parameters 122
Motor Hunting Occurs When Operating With a Light Load 138
Motor is Too Hot 137
Motor Overload 123, 127
Motor Protection Function 127
Motor Rotates After the Drive Output is Shut Off 139
Motor Rotates Faster Than the Frequency Reference 138
Motor Rotates in One Direction Only 137, 140
Motor Stalls During Acceleration or With Large Loads 137
Motor Stops During Acceleration or When a Load is Connected 140
Motor Wiring 38
Multi-Function Analog 1 (Terminal AM Monitor Selection) 179
Multi-Function Digital Input Terminal S1 Function Selection 177
Multi-Function Digital Input Terminal S2 Function Selection 177
Multi-Function Digital Input Terminal S3 Function Selection 177
Multi-Function Digital Input Terminal S4 Function Selection 177
Multi-Function Digital Input Terminal S5 Function Selection 177
Multi-Function Input Selection Error 134
Multi-Function Input Setting Error 124
Multi-Step Speed Reference 177

P

Parameter Range Setting Error 134
Parameter Setting Range Error 124
Parameter Settings 59
PASS 124, 132
Password 1 173
Password 2 173
Password Settings 66
Performance Life 146
Peripheral Devices Affected by Drive Operation 140
PF 123, 129
Phase Order Selection 173
Poor Speed Control Accuracy 138
Programming Mode 57, 58
Protective Covers, Removing 36, 160
PWM Feedback Data Fault 123
PWM Feedback Fault 126

R

RAM Fault 123, 125
REMOTE 60
Replacement Parts 146, 170
Restart Enabled 178
Reverse Direction 178
Reverse Operation Selection 173
Reverse Run Command (2-Wire sequence) 178
RTS Control Selection 179
Run Command/Frequency Reference Source Selection Error 134
Run Command at Power Up 173
Run Command Input Error 124
Run Command Selection 136, 173
Run Command Selection during Program 173
Run Command Selection Error 124

S

Safety Hazard Definitions 11
Safety Information 11
S-Curve Characteristic at Accel End 174
S-Curve Characteristic at Accel Start 174
S-Curve Characteristic at Decel End 174
S-Curve Characteristic at Decel Start 174
SE 124, 133
Serial Communication Reference Selection 177
Serial Communication Transmission Error 124, 131
Setup Mode 58, 60
Sinking/Sourcing Mode Switch 21
Slip Compensation Gain 174

Slip Compensation Primary Delay Time 174
Soft Charge Circuit Fault 124
Soft CLA Selection 181
Software No. (Flash) 184
Software No. (ROM) 184
Speed Agreement Detection Level 180
Speed Search 178
Stall Prevention 122
Stall Prevention Level during Acceleration 180
Stall Prevention Level during Run 180
Stall Prevention Selection during Acceleration 180
Stall Prevention Selection during Deceleration 180
Stall Prevention Selection during Run 180
Standard Connection Diagram 32
STOP Key Function Selection 182
Stopping Method After Communication Error 179

T

Terminal A1 Bias Setting 178
Terminal A1 Gain Setting 178
Terminal A1 Signal Level Selection 178
Terminal Block Configuration 35
Test Run 64
Tightening Torque 37
Timing Fault 123
Torque Compensation Gain 122, 174
Torque Detection 1 (N.O.) 178
Torque Detection 2 (N.O.) 178
Torque Detection Level 1 181
Torque Detection Selection 1 181
Torque Detection Time 1 181
Transistor Input Signal 44

V

V/f Data Setting Error 124, 134
Verify Menu 58

W

Wire Gauges 37
Wiring Checklist 49
Wiring Procedure 42

Z

Zero Speed 178

This Page Intentionally Blank

This Page Intentionally Blank

YASKAWA AC Drive – J1000
Compact V/f Control Drive
Technical Manual

YASKAWA ELECTRIC AMERICA, INC.
2121 Norman Drive South, Waukegan, IL 60085, U.S.A.
Phone: (800) YASKAWA (800-927-5292) or 1-847-887-7000 Fax: 1-847-887-7370
http://www.yaskawa.com

YASKAWA ELECTRIC AMERICA, INC.
Drives Division,
16555 W. Ryerson Rd., New Berlin, WI 53151, U.S.A.
Phone: (800) YASKAWA (800-927-5292) Fax: (262) 782-3418
http://www.yaskawa.com

YASKAWA ELÉTRICO DO BRASIL COMÉRCIO LTDA.
Avenda Fagundes Filho, 620 Bairro Saude, São Paulo,SP04304–000, Brasil
Phone: 55-11-3585-1100 Fax: 55-11-5581-8795
http://www.yaskawa.com.br

YASKAWA ELECTRIC CORPORATION
New Pier Takeshiba South Tower, 1-16-1, Kaigan, Minatoku, Tokyo, Japan 105-022,
Phone: 81-3-5402-4511 Fax: 81-3-5402-4580
http://www.yaskawa.co.jp

IRUMA BUSINESS CENTER (SOLUTION CENTER)
480, Kamifujisawa, Iruma,Saitama 358–8555, Japan
Phone: 81-4-2962-5696 Fax: 81-4-2962-6138

YASKAWA ELECTRIC EUROPE GmbH
Am Kronberger Hang 2, Schwalbach, 65824, Germany
Phone: 49-6196-569-300 Fax: 49-6196-569-312

YASKAWA ELECTRIC CORPORATION

In the event that the end user of this product is to be the military and said product is to be employed in any weapons systems or the manufacture thereof, the export will fall under the relevant regulations as stipulated in the Foreign Exchange and Foreign Trade Regulations. Therefore, be sure to follow all procedures and submit all relevant documentation according to any and all rules, regulations and laws that may apply.

Specifications are subject to change without notice for ongoing product modifications and improvements.

© 2008 YASKAWA ELECTRIC CORPORATION. All rights reserved.

Manual No. SIEP C710606 32A